GLS-2800
GLS-3300 SERIES

HIGH SPEED CNC TURNING CENTER

THE ULTIMATE MACHINING POWER

GOODWAY®

HIGH SPEED CNC TURNING CENTERS

With the latest machine tools technology and high quality components, GOODWAY brings you the new GLS-2800 / GLS-3300 series high speed CNC turning center. This series is based on high precise linear guide ways and featured big bore, high power, fast cut and more to provide you machining solution with high efficiency cutting power. Besides, The GLS-2800 / GLS-3300 series equipped with an optional live tooling turret, C-axis, Y-axis and sub-spindle, G.LINC 350 intelligent control system and various automation equipment to reach a complete series and easily meet your machining needs of today and tomorrow.

(GLS-2800MS model shown)

GOODWAY HIGH SPEED CUTTING SERIES

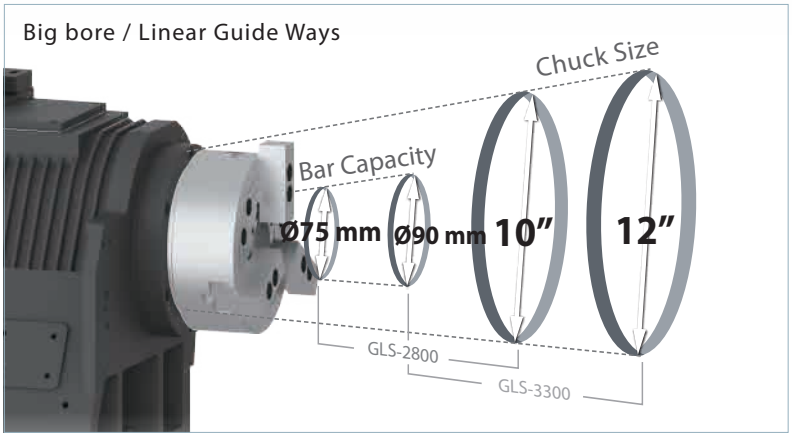

Model	Chuck size	Bar capacity
GLS-150	6" (Big bore)	Ø51 mm
GLS-1500	6" (Big bore)	Ø51 mm
GLS-200	8" (Big bore)	Ø65 mm
GLS-2000	8" (Big bore)	Ø65 mm
GLS-2800	10"	Ø75 mm
GLS-3300	12"	Ø90 mm

Please contact GOODWAY for detailed information.

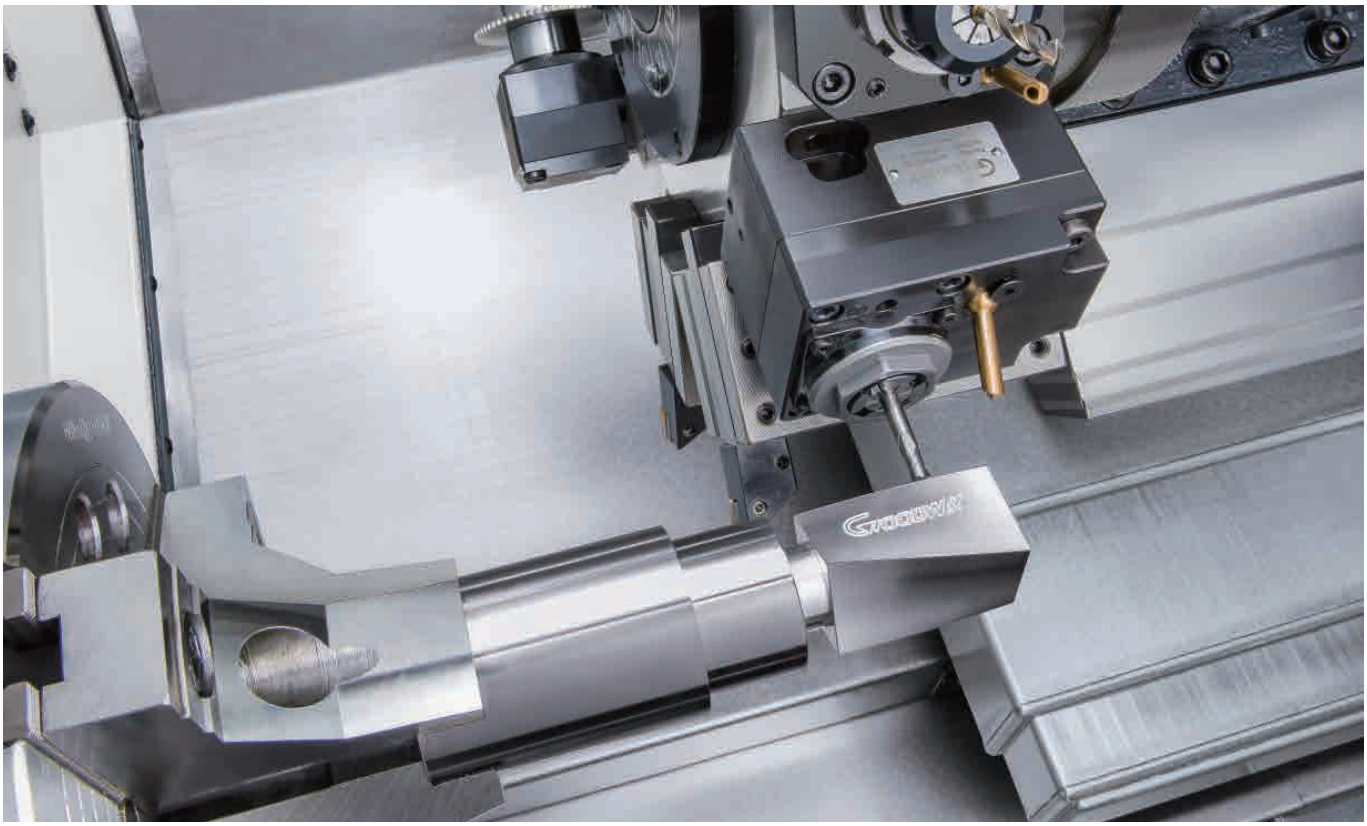

Equipped with an optional live tooling turret, C-axis, Y-axis and sub-spindle and other advanced features allows GLS-2800/3300 can work on turning, milling, drilling, tapping and off-center milling tasks. The machining capability equals the integration of turning center and machining center, which significantly lowers machining cycle time and manpower, and also prevent accuracy error of switching work-piece to another machine.

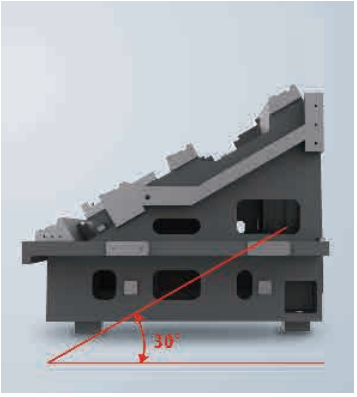

TRUE SLANT BED STRUCTURE

The 30° true slant bed design provides superior support and heavy cutting ability, also excellent chips removal and convenient loading process.

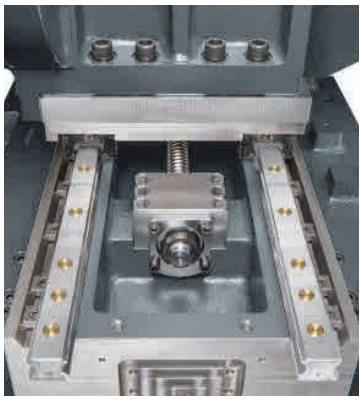

HIGH SPEED LINEAR GUIDE WAYS

X / Z axes and Y-axis (opt.) utilize the high speed high precise linear guide way design to provide the optimal motion and efficiency.

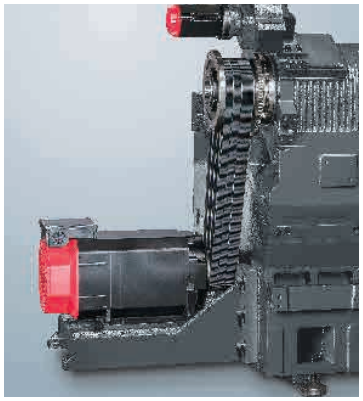

HIGH POWER SPINDLE

18.5 kW high power motor (GLS-3300) with spindle torque output up to 757 Nm, which can easily overcome all kinds of different materials.

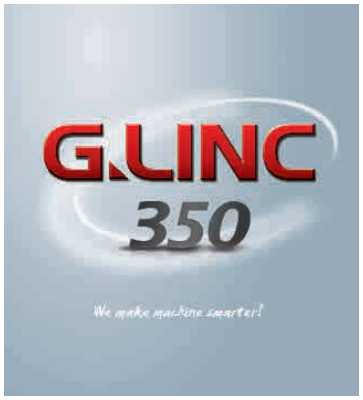

INTELLIGENT SYSTEM
(OPT.)

Advanced GOODWAY G.LINC 350 intelligent system combines high class hardware and complete intelligent assisting features which can make machine smarter.

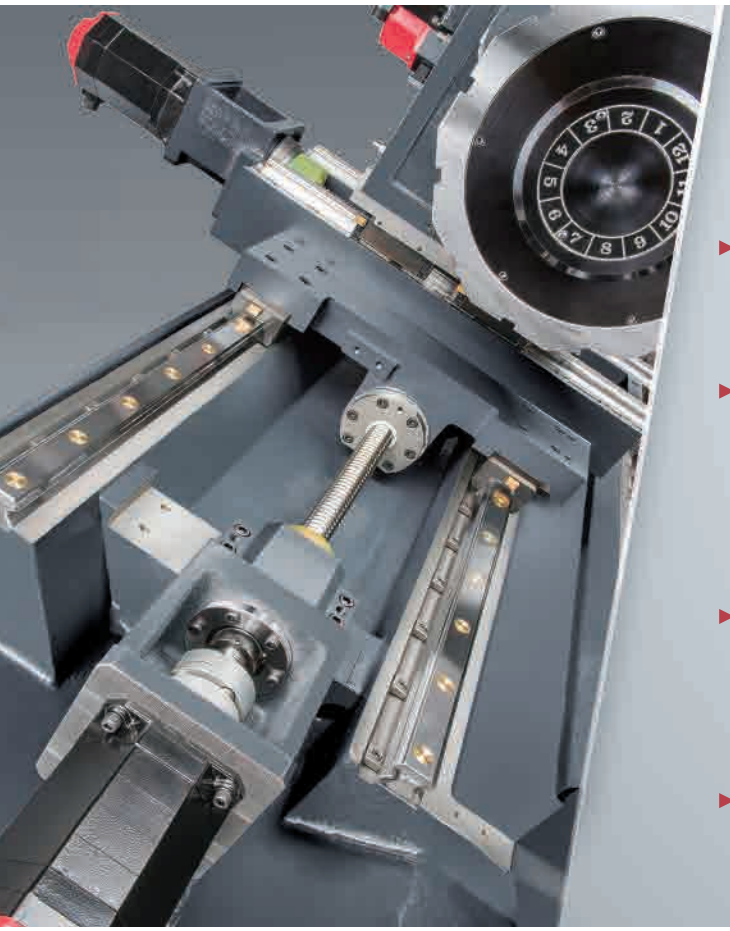

SUPER RIGID STRUCTURE

- Major structural components have been combined into one solid platform. The low center of gravity 30° slant bed design provides the most rigid foundation possible for the headstock, turret, and tailstock.
- Built to withstand years and years of rigorous high production turning, the heavily ribbed, one-piece, thermally balanced bed and casting parts are of "MEEHANITE" casting, which can provide more efficient anti-damping and decrease lower deformation to allow much longer lasting and stand out among others.
- All casting structure are detected by using Finite Element Analysis (FEA) to optimize the intensity, which can efficiently lower the deformation and strengthen the machine rigidity to ensure stable positioning and repeatability accuracy.
- X / Z axes adopt the higher level FANUC αi series absolute servo motor that can provide rapid acceleration/deceleration and powerful thrust, which can efficiently lower the machining cycle time.

- C3 class hardened and precision ground ball screws ensure the highest accuracy and durability possible.

  1 Ball screws are through per-compaction to eliminate backlash.

  2 Ball screws are through precise detection to ensure the parallelism with linear guide ways.

- X & Z axes utilize high performance ball type linear guide way design which provides high precision high speed and low abrasion advantages.
  (Roller type linear guide ways are available for option)

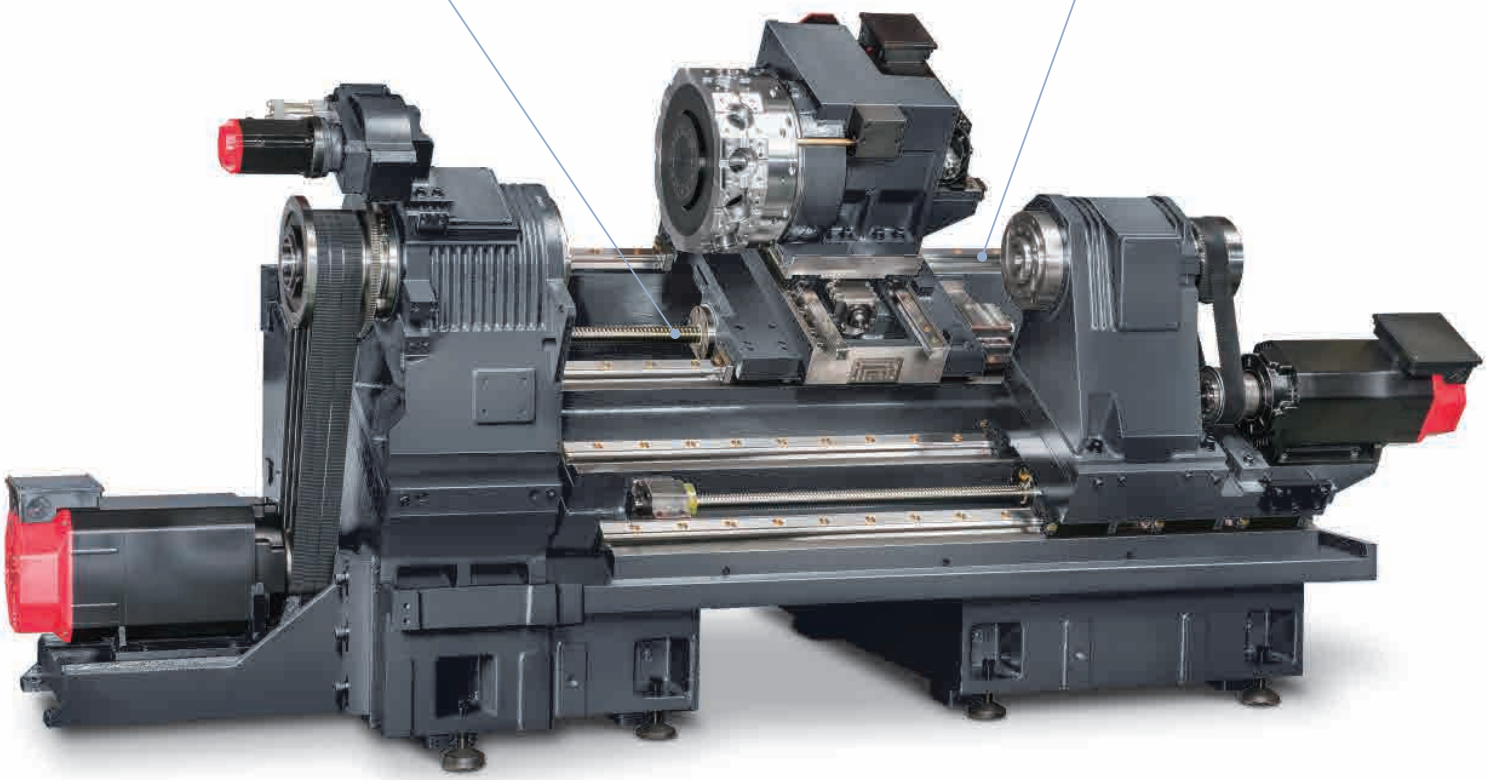

(Casting structure of GLS-2800MS model shown)

ULTIMATE TURNING POWER

- The heavy-duty headstock is one-piece casting reinforced with heat dispensing fins, which can fasten heat radiation, minimize thermal displacement and lower accuracy error of thermal deformation.
- P4 grade (Class 7) super-high precision bearings are directly assembled for maximum level of support and precision. Bearing configuration adopts optimal 2-point support design for heavy-duty cutting with stable performance and long term high accuracy durability.
- Specialized high performance V-type belt driven spindle motor can lower the effects of heat generated by motor. Pulley ratios has been adjusted to tune the motor's maximum speed to match the spindle's maximum speed, which result in full output at the lowest speed and maximize torque.

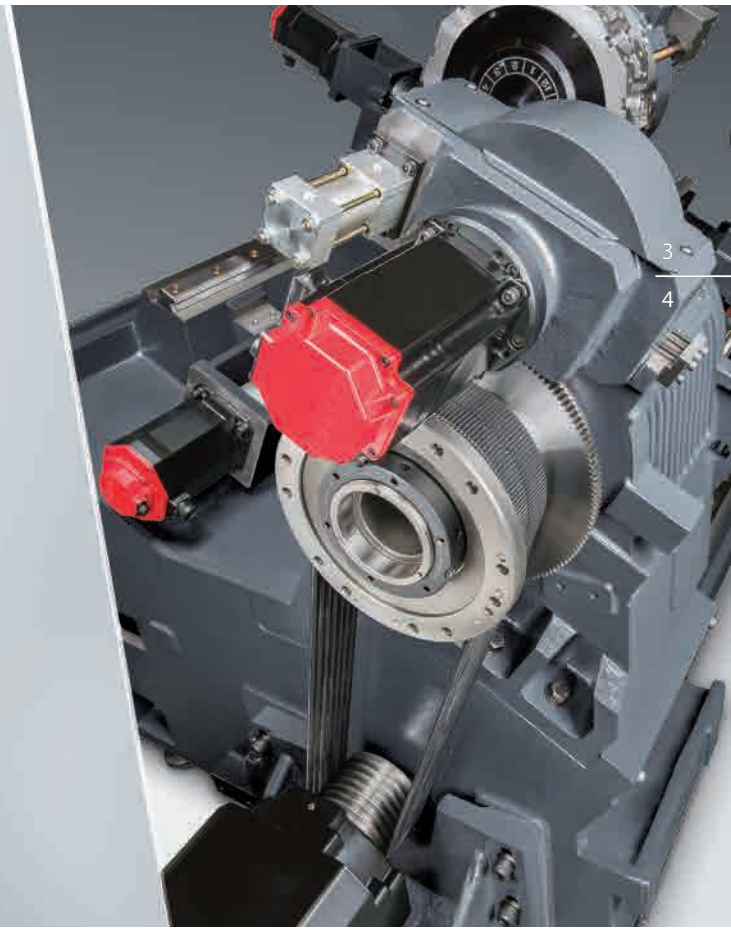

Spindle Output

【 GLS-2800 】

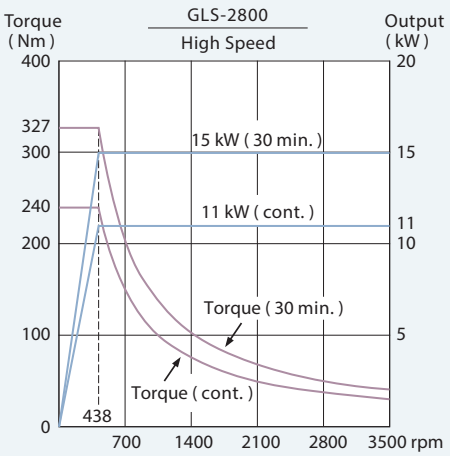

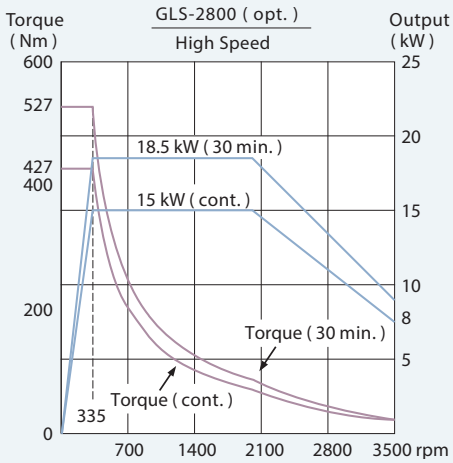

【 GLS-3300 】

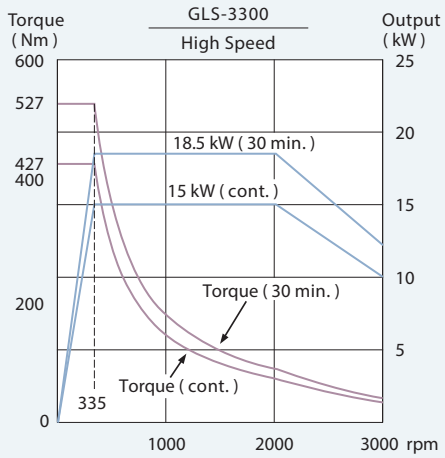

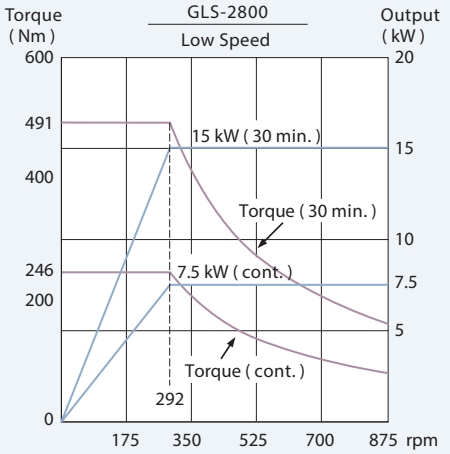

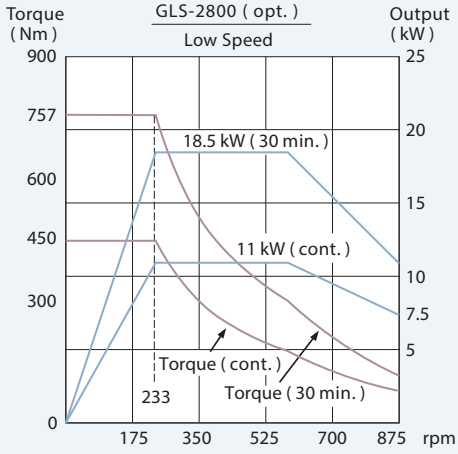

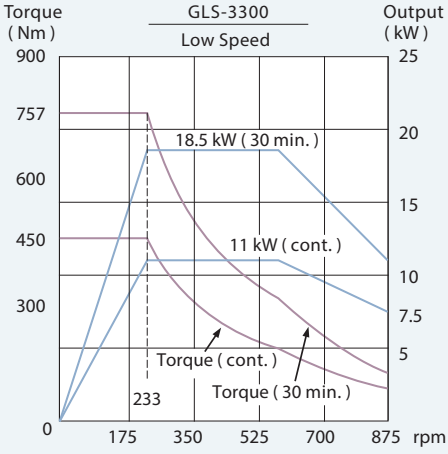

ADVANCED TURRET TECHNOLOGY

- Heavy load servo motor tool indexing system provides 10 or 12-station turret with a 0.3 second indexing time.
- High precision curvic couplings with large diameter Ø 250 mm positioning tool plate. With 6,400 kg clamping force, it makes sure the rigidity of turret in any machining conditions.
- The curvic couplings provide auto-centering, auto-clean and a large contact area which are designed to distinct from traditional couplings.

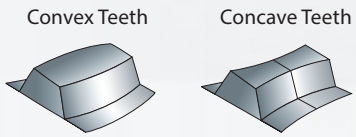

- Curvic Coupling

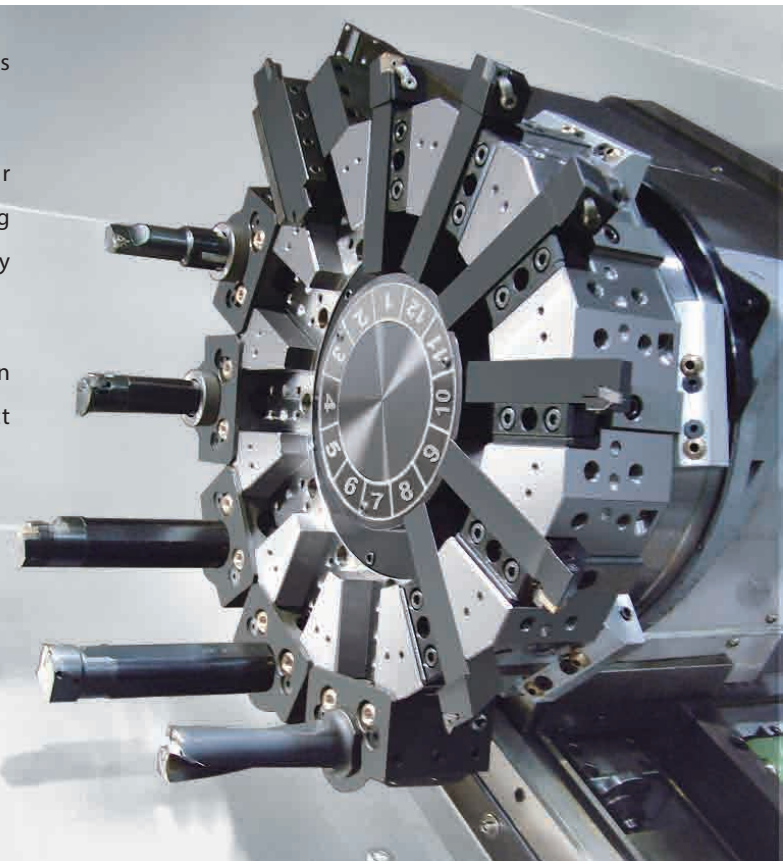

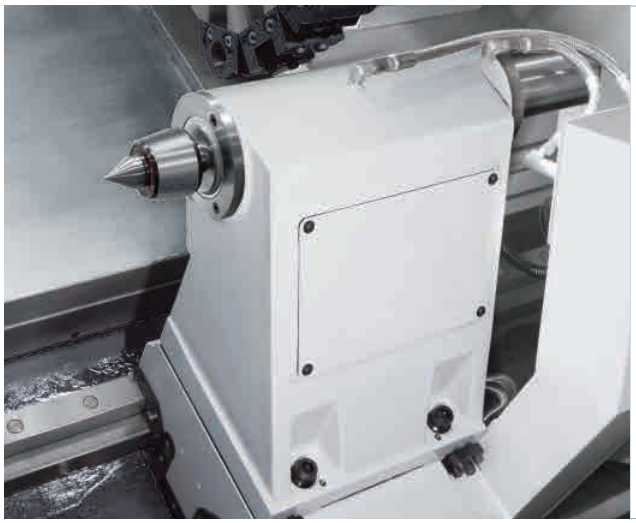

SUPER RIGID TAILSTOCK

- Programmable base tailstock can efficiently achieve tough machining tasks, and it has been simplified through use of custom software interface. Z-axis carriage automatically locks on to the base of the tailstock and drags it to the desired position.
- The adjustment of the quill (MT#4) is programmable and thrust can be adjusted by hydraulic.

- Core components such as spindles, turrets, tailstocks are precisely developed by GOODWAY in a constantly temperature controlled A/C system to achieve the strict accuracy requirements and the best quality.

POWERFUL LIVE TOOLING TURRET

- Super rigid 3-piece curvic coupling design, turret can remain the same place during indexing to achieve the faster indexing.
- The 12-station GOODWAY live tooling turret offers 12 stations available for live tooling (live tooling tools rotate in working position only) and features a non-lifting turret disk.
- With the latest technology, live tooling is driven by an AC servo motor to provide ample power, in the form of torque. Now, even the toughest of jobs may be tackled without a sweat.

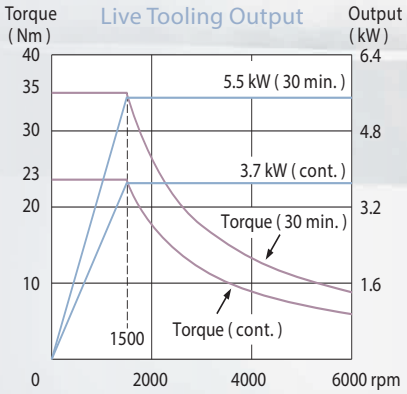

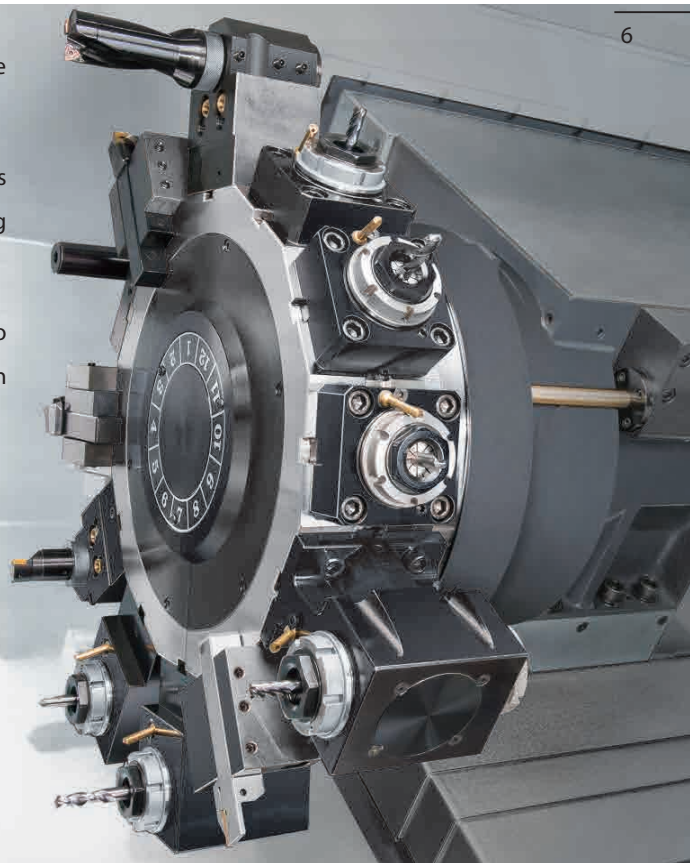

HIGH PRECISE C-AXIS

- C-axis adopts super rigid Cf-axis with disk brake system, and with the FANUC servo motor generating 240 Nm (cont.) of torque it offers excellent surface finishes and accuracy. Plus, dynamic accuracy is within ± 0.02° even under heavy cutting condition.

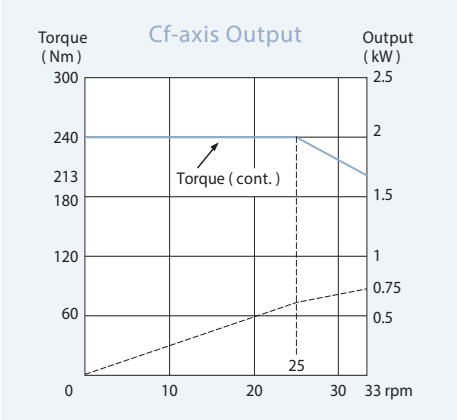

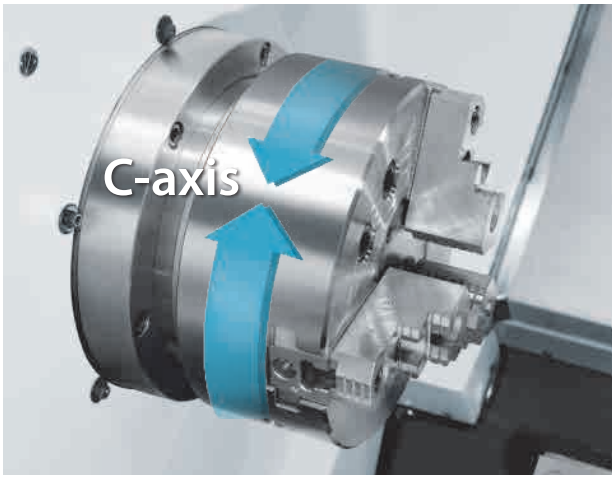

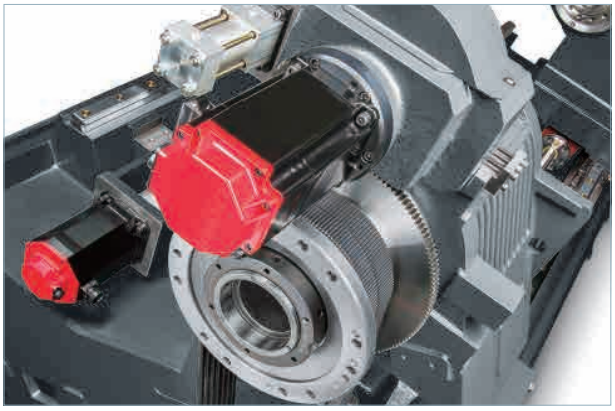

BACK-END MACHINING CAPABILITY

All series could select the optional sub-spindle to machine the back-end after receiving the part. Ø 51 mm bar capacity adopts 8" chuck featuring ejector, which allow the finished parts can smoothly drop on parts catcher successfully. All the processes from loading the parts can all be done in one machine without a pause.

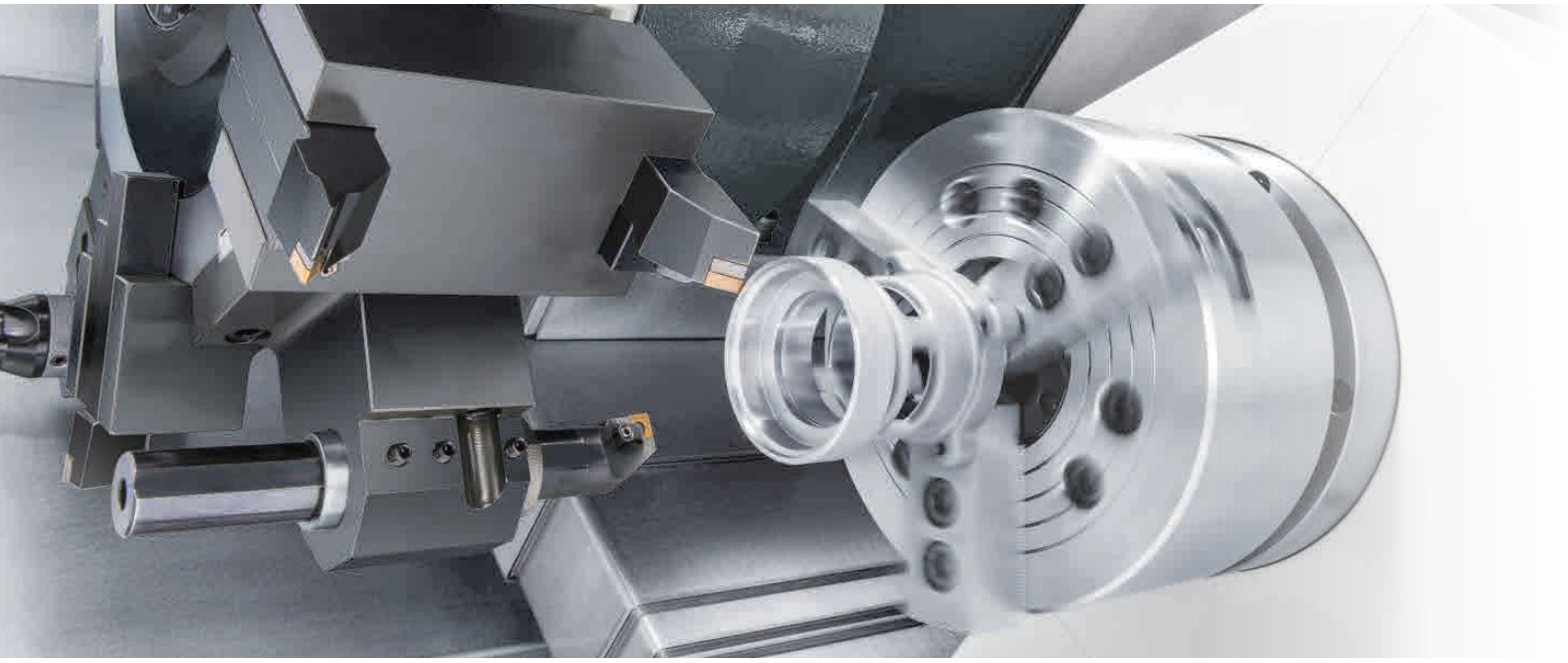

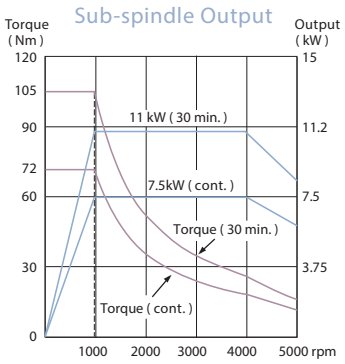

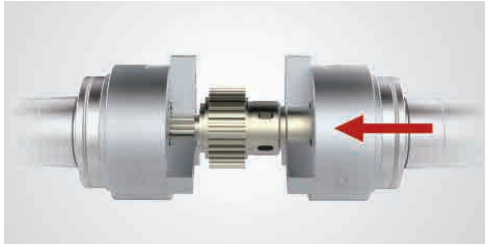

Automatic part transfer of work piece from main spindle to sub-spindle saves manpower and cycle time, while reducing accuracy lost, which will occur if manually handling the part from machine to machine.

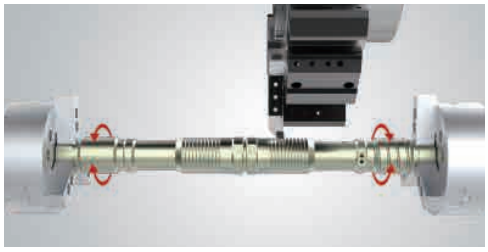

The sub-spindle configuration is also ideal for machining long work pieces such as small diameter shafts. Both ends of the work piece can be supported by the main and sub spindles, allowing the middle section(s) to be accurately machined.

- Sub-spindle can be controlled by Cs-axis to achieve back-end machining, which allows conveniently operating, fast positioning, and higher accuracy.
- Z_2-axis adopts high performance linear guide way design, which is driven by FANUC direct driven motor, provides the optimal axial accuracy.

Y-AXIS CONTROL CAPABILITY

The optional Y-axis control can achieve X, Y, Z, C axes simultaneously machining, which allow the series can work on Y-axis 100 mm off-center milling (off-center ± 50 mm) , drilling, and tapping as well as improving the machining accuracy from a regular 3 axes simultaneously machining processes.

The fictitious axis and X-axis saddle adopt 30° included angle design that efficiently lower the center of gravity, and lighten the Y-axis mechanism loads. Meanwhile, the center of gravity of turret lays on the proper range of saddle to make sure the overall structural rigidity.

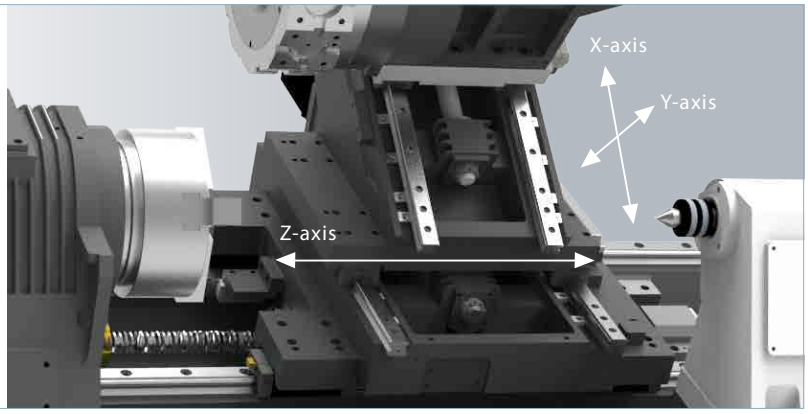

UNIQUE Y-AXIS MACHINING CAPABILITY

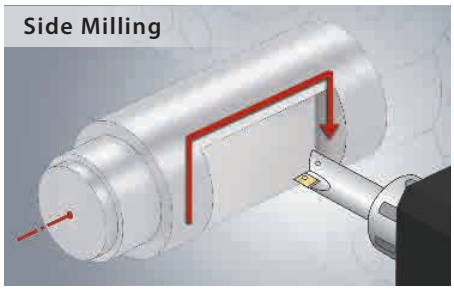

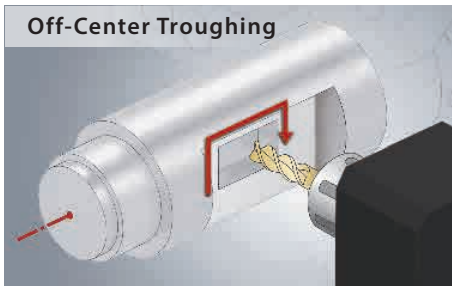

HIGH PRECISION Y-AXIS MACHINING CAPABILITY

Polar coordinate interpolation V.S Y-axis control

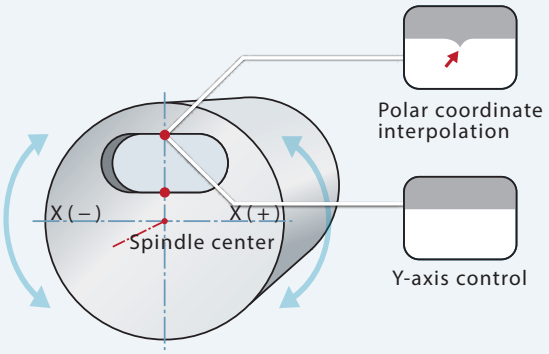

- The polar coordinate interpolation can work on troughing or contouring. X-axis reverses at cross point of the center point of workpiece and contour, which makes tool not able to be completely contouring and remains worse accuracy.
- With Y-axis control, it can avoid the situation above and remain better accuracy.

O.D. Troughing

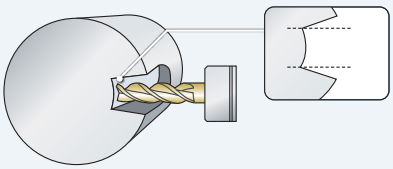

- Not Featuring Y-axis, width of troughs are not perfectly parallel with worse accuracy.

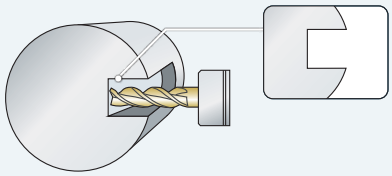

- Featuring Y-axis, width of trough remains parallel with better accuracy.

G.LINC 350 Option

Makes Your Machine Smarter

- Advanced Hardware
- Outstanding Operability
- Streamlined Programming
- High Security and Shortened Machining Setting
- Reliable Continuous Operation
- Shortened Troubleshooting Time
- Improved Utilization Rate
- 3D cutting simulation preview

Significant Production Efficiency

General Production Process: Setting → Test-Run → Actual Production

Using 3D Simulation Inspection: Setting → Test-Run → Actual Production

Utilization Rate ↑ 30 %

Comprehensive Functions

Programming	Setting	Test-Run	Actual Production	Daily Used
Dynamic graphic display	3D advance tool path and cutting simulation	Tool load monitor	Tool load monitor	Safety signal viewer
Program management		Program check	3D Real-time cutting simulation	Fast alarm check productivity
Friendly programing environment		Smart balance etection	Interference check (31*i* option needed)	Productivity management
Programming auxiliary		3D Real-time cutting simulation	Load monitoring	Twin operation system switch
Manual Guide *i*		Interference check (31*i* option needed)		Maintenance management
Embedded E-manual				NFC apply authority management and record

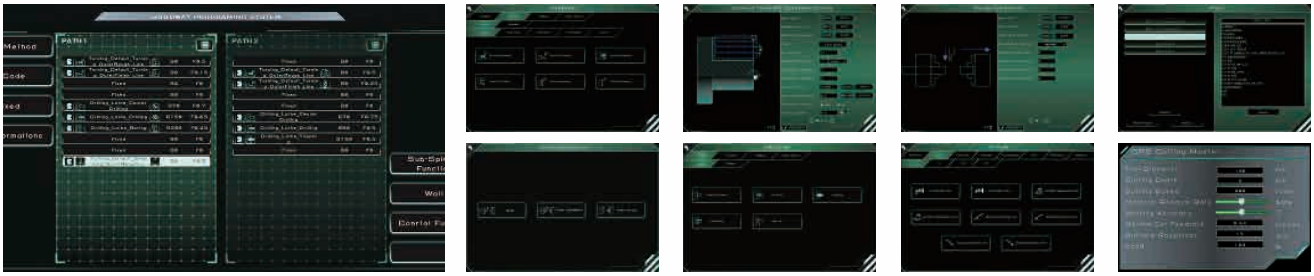

STANDARD / OPTIONAL FEATURES

Standard Features

CHIP CONVEYOR

The standard chip conveyor features adjustable timers that allow the operator to set operation intervals according to the amount of chips generated by the machine. Thus, reducing coolant loss to a minimum.

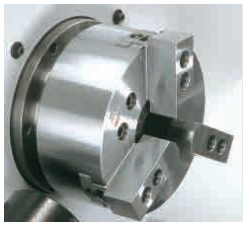

3-JAW CHUCK W /SOFT JAWS X 1 SET

TRI-COLOR STATUS LIGHT

Optional Features

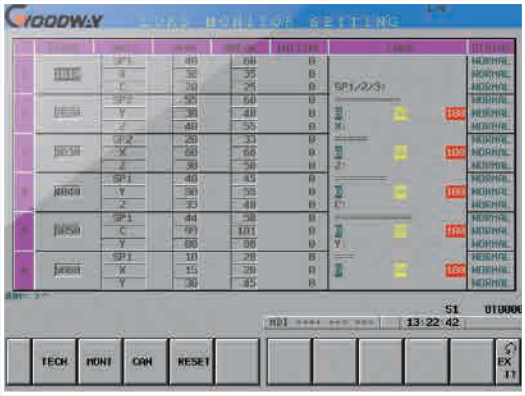

LOAD MONITORING

The load monitoring function is used to detect abnormal load of tools by monitoring the variation in spindle motor and servo motor loads during the cutting process. When abnormal loads are detected, the machine will stop at program end (M30) or immediately (feed hold status) according to tool life value or tool break value respectively.

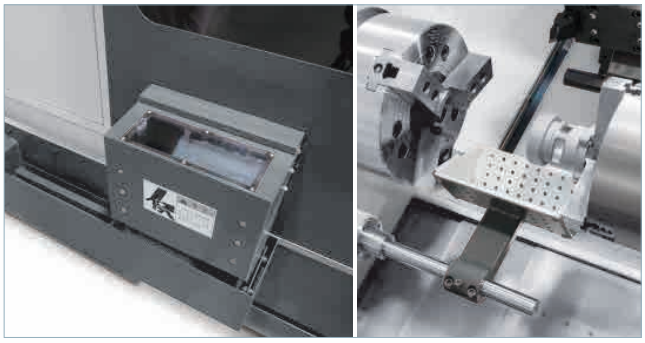

PARTS CATCHER

The optional parts catchers can be programmed to catch finished parts after cut-off. Part conveyor systems are also available.

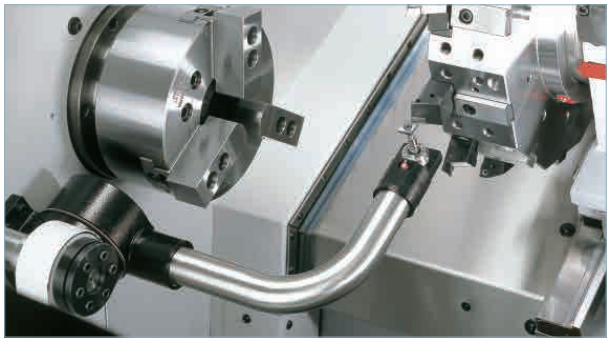

TOOL PRESETTER

The optional RENISHAW HPMA tool presetter allows tool check task easier.

12-Station Turret

Interference Diagram

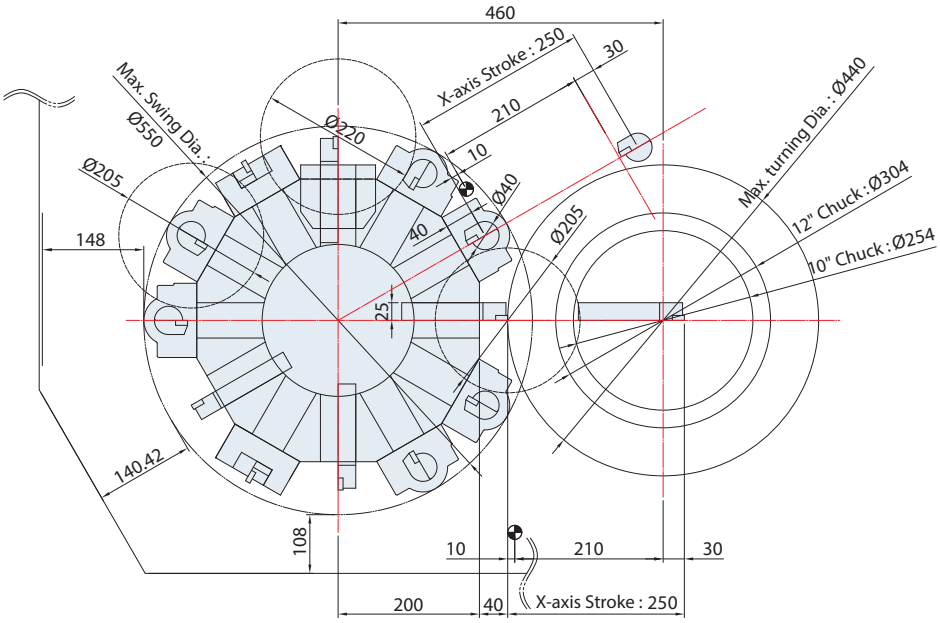

Tooling System

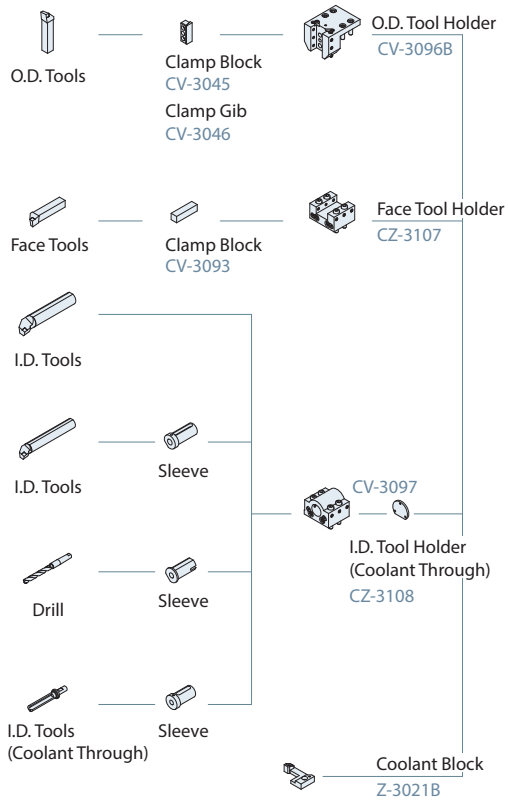

10-Station Turret

Interference Diagram

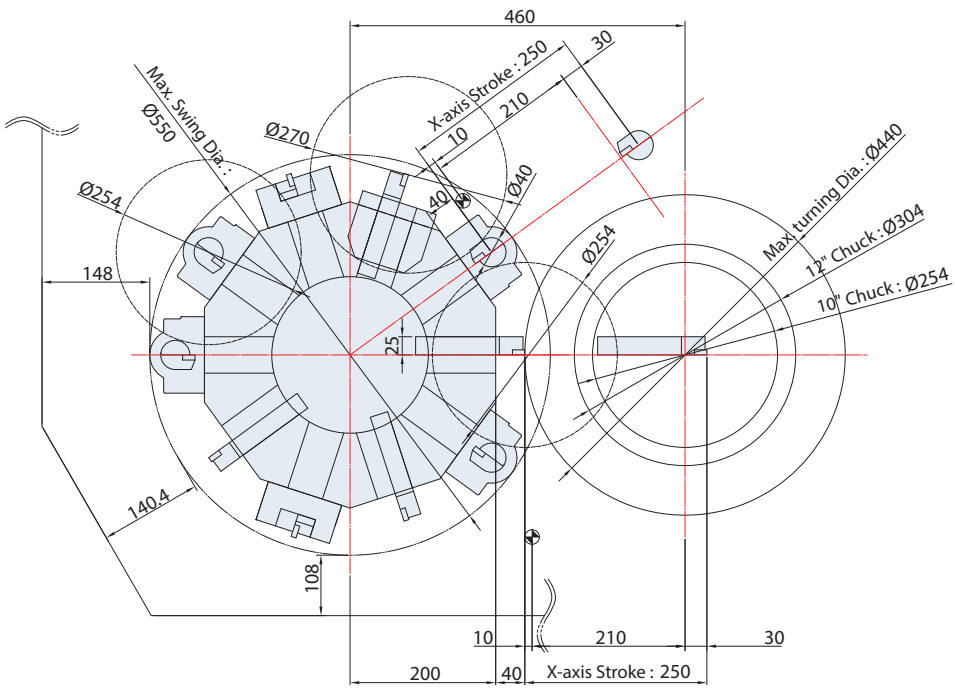

Tooling System

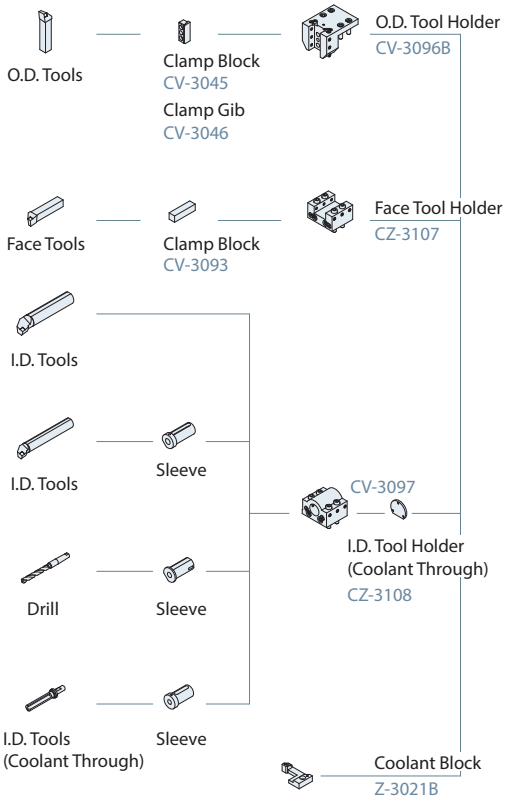

Interference Diagram ▶ Turning tool

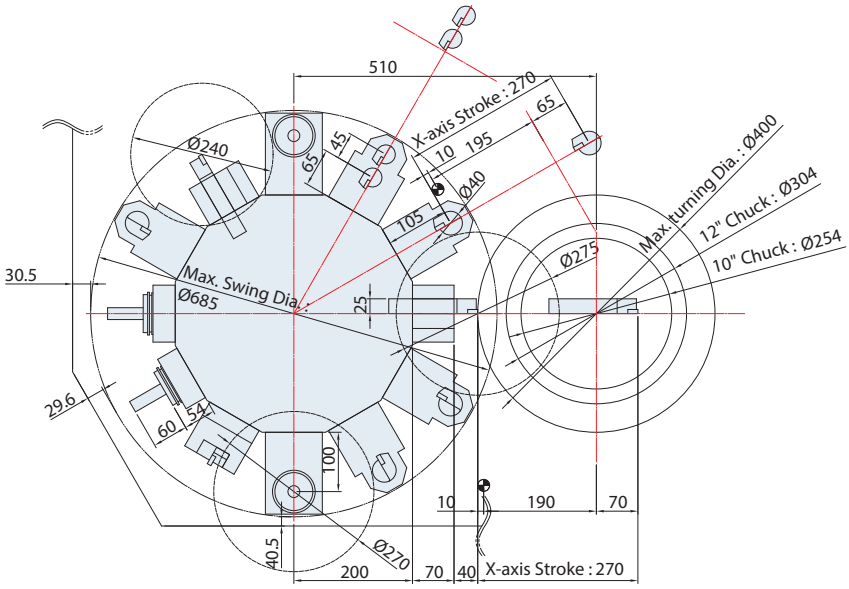

Tooling System

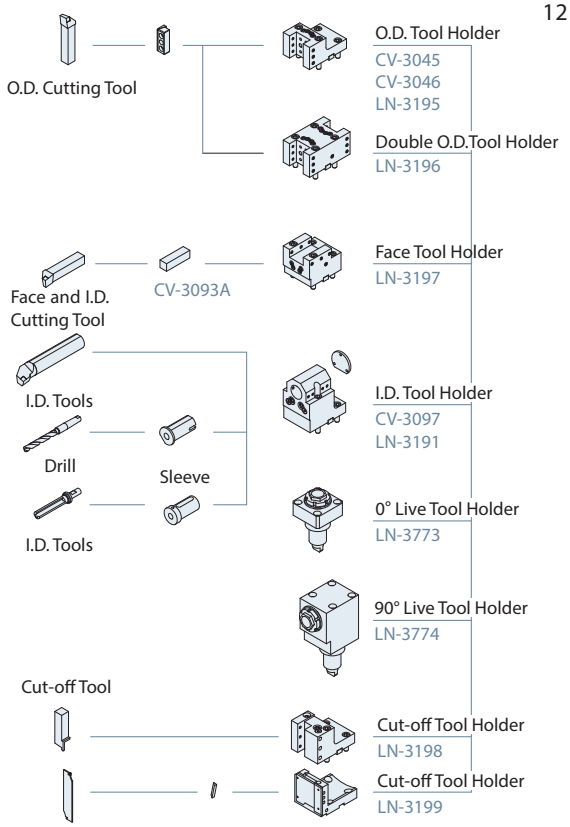

Interference Diagram ▶ 0° Live tool

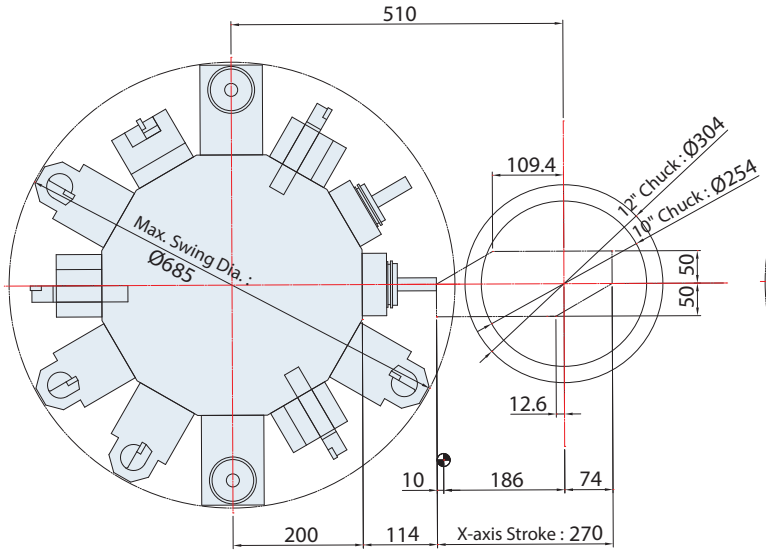

Interference Diagram ▶ 90° Live tool

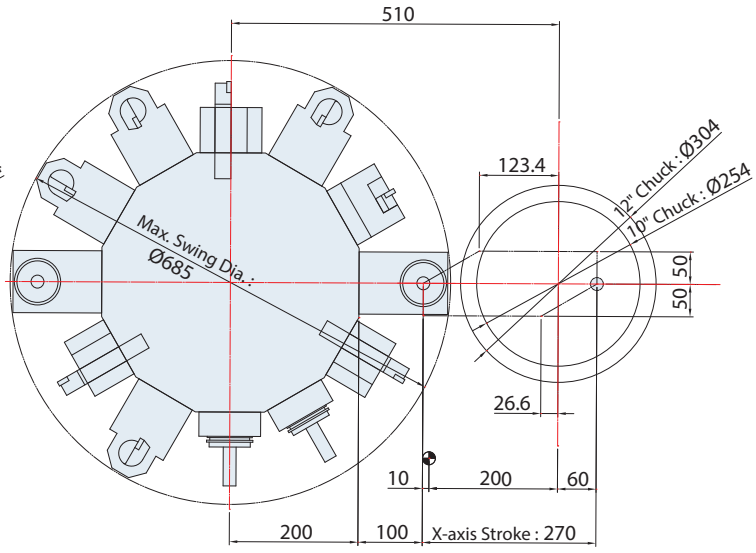

Unit : mm

12-Station Turret | 10-Station Turret

Work Range

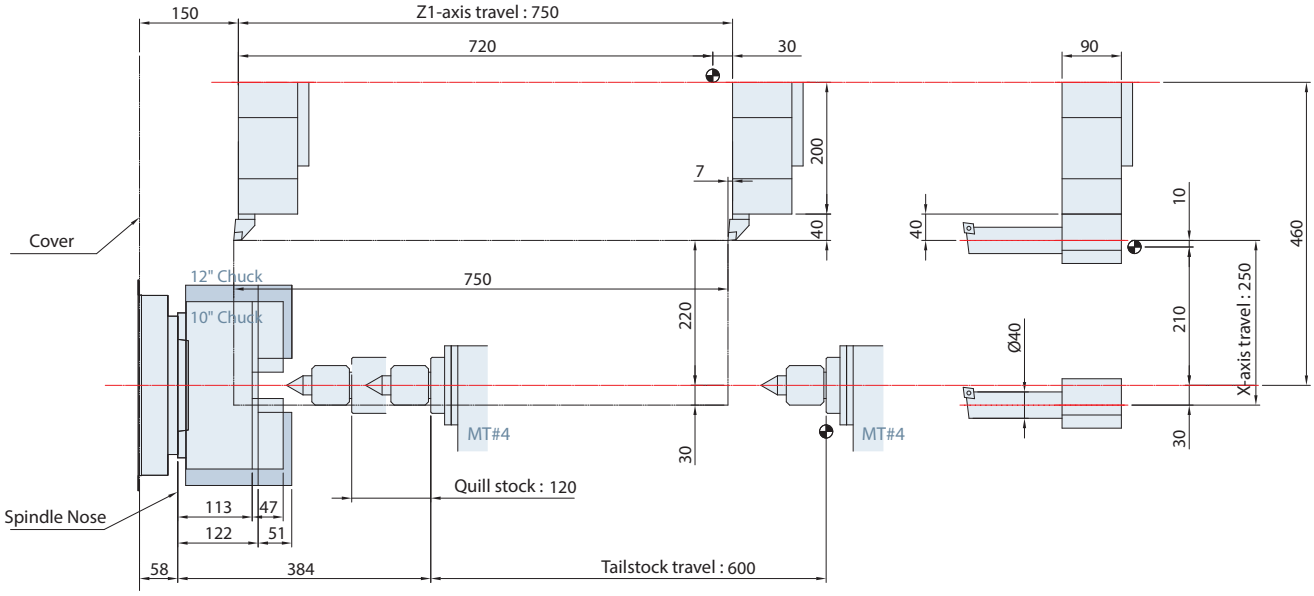

12-Station Live Tooling Turret

Work Range

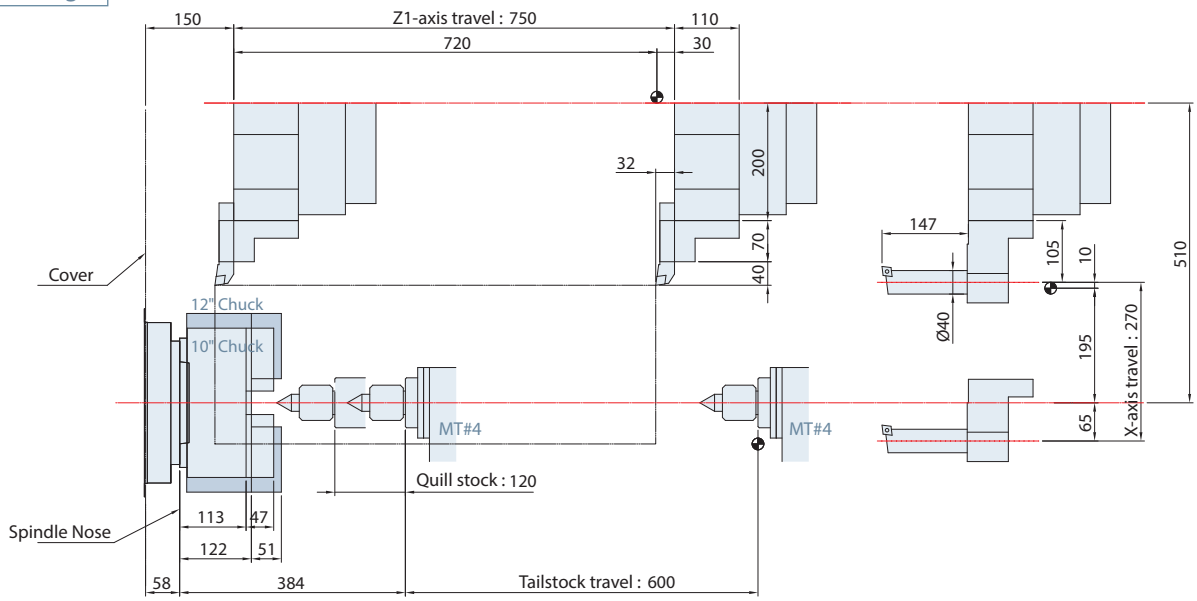

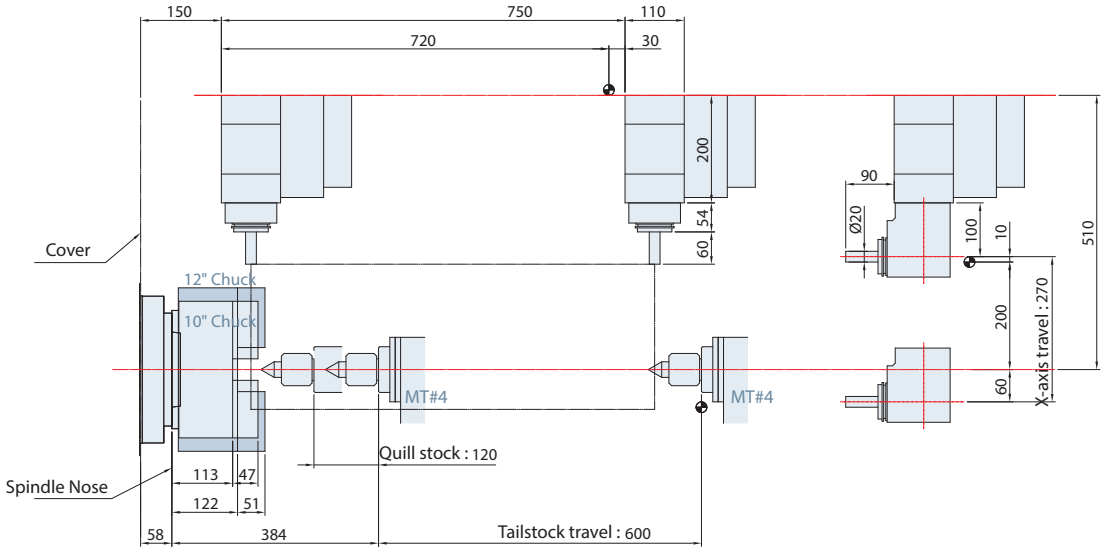

Unit : mm

Work Range

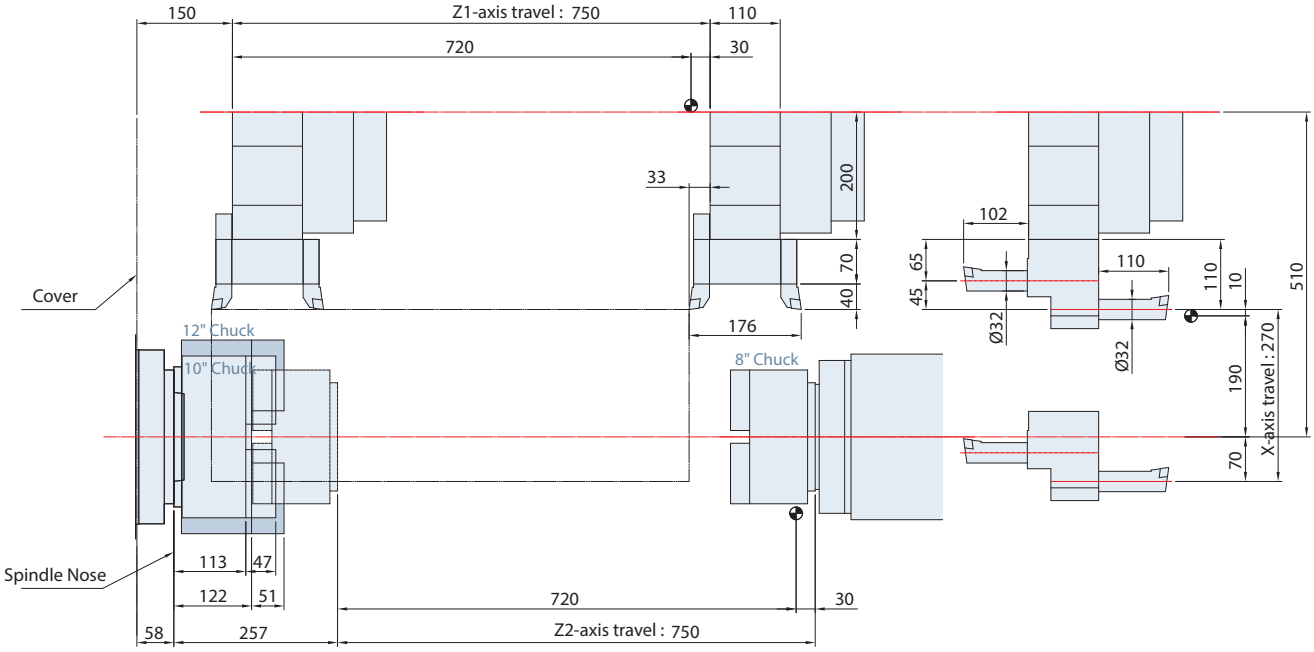

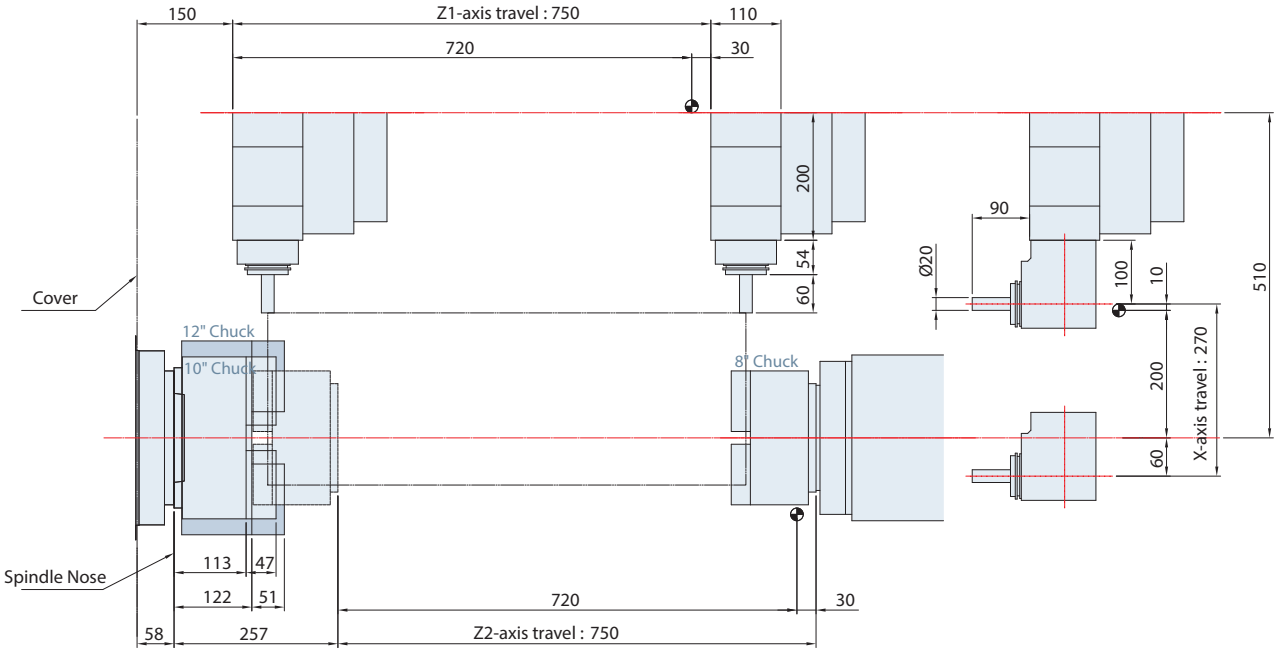

Unit : mm

Interference Diagram

【 Standard model 】

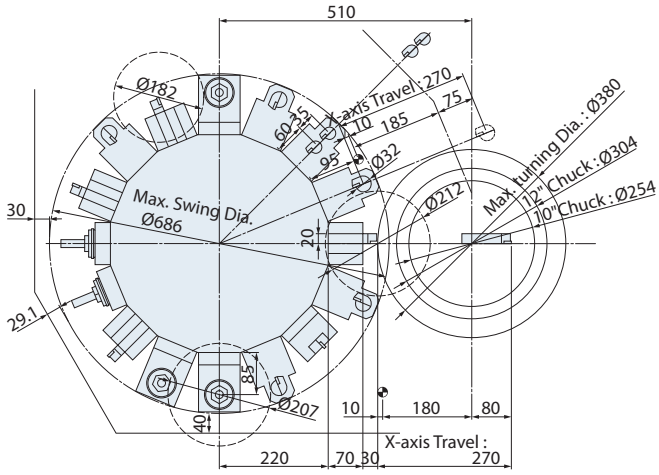

【 Y-axis model 】▶ Turning tool

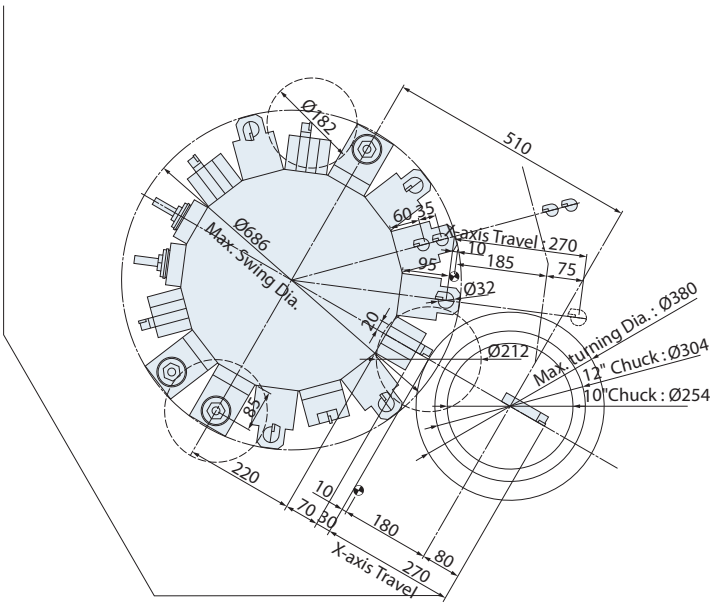

【 Y-axis model 】▶ 0° Live tool

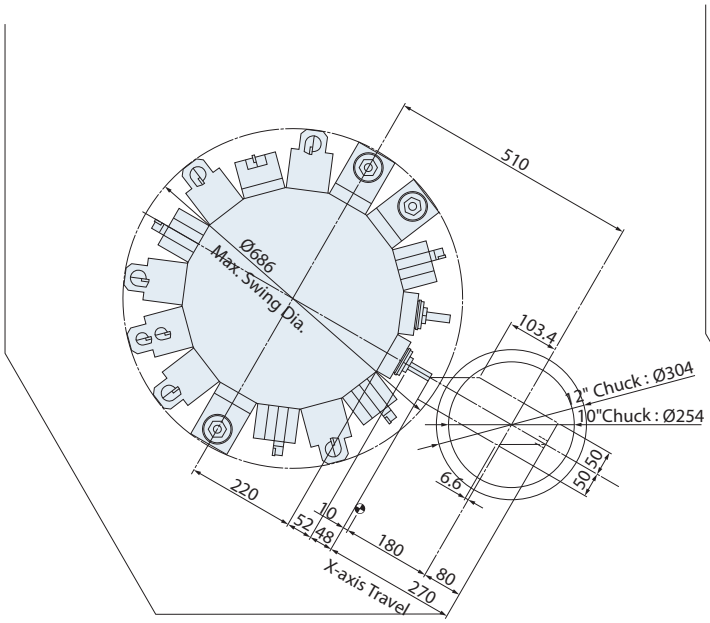

【 Y-axis model 】▶ 90° Live tool

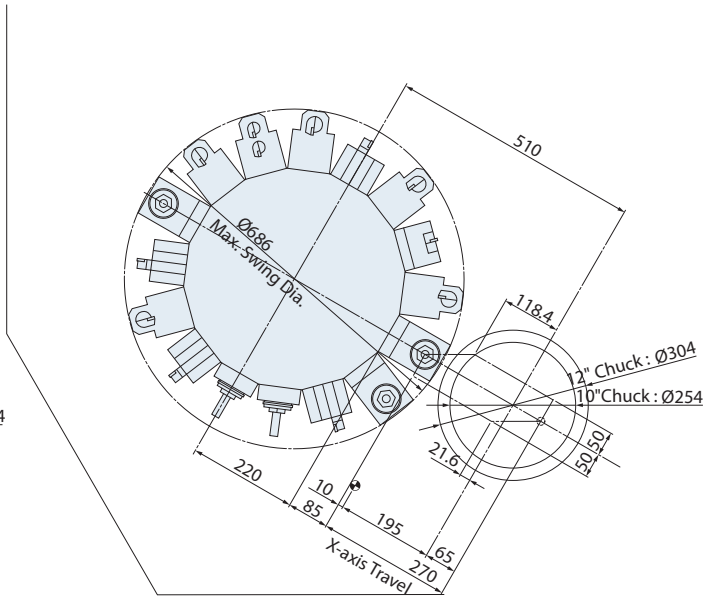

Tooling System

▶ With Sub-spindle

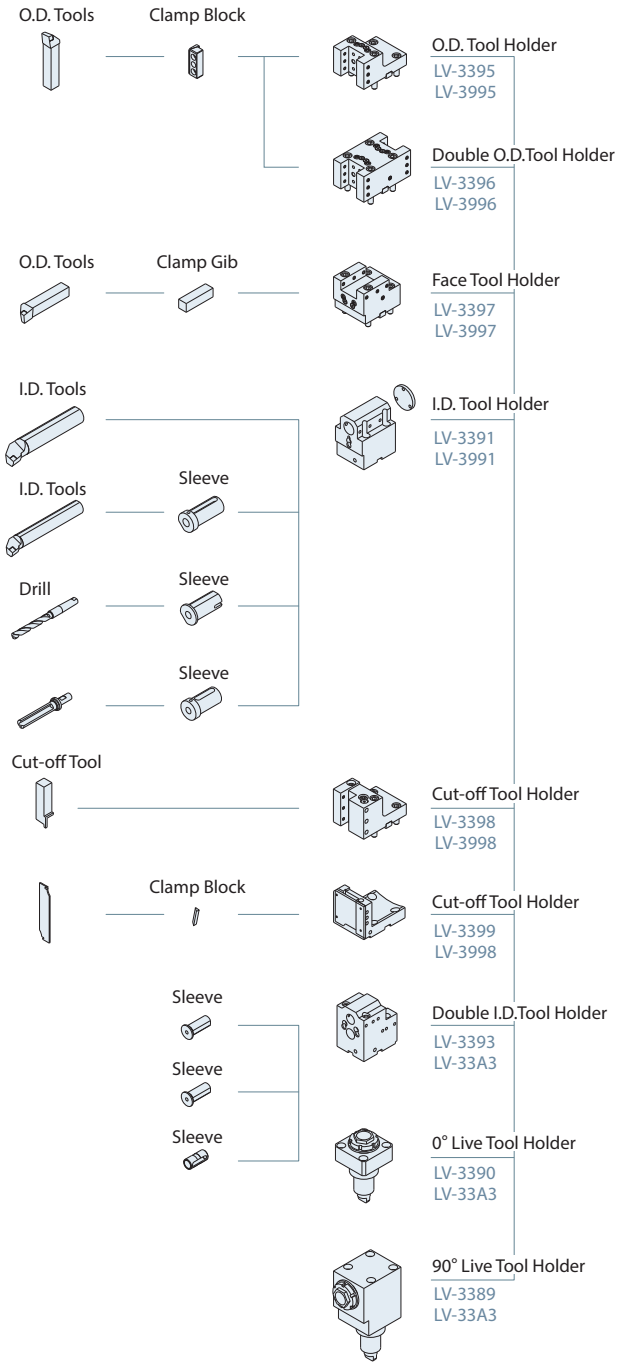

▶ Without Sub-spindle

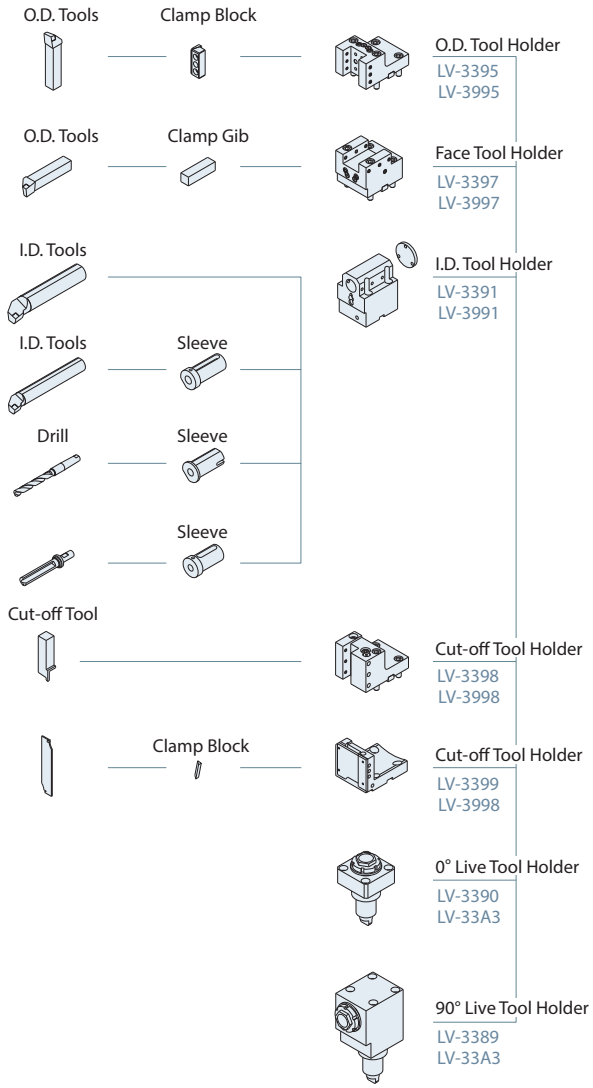

Unit : mm

16-Station Live Tooling Turret

Work Range

Hydraulic type LP-1 programmable tail stock (live center MT#4)

Turning tool ►

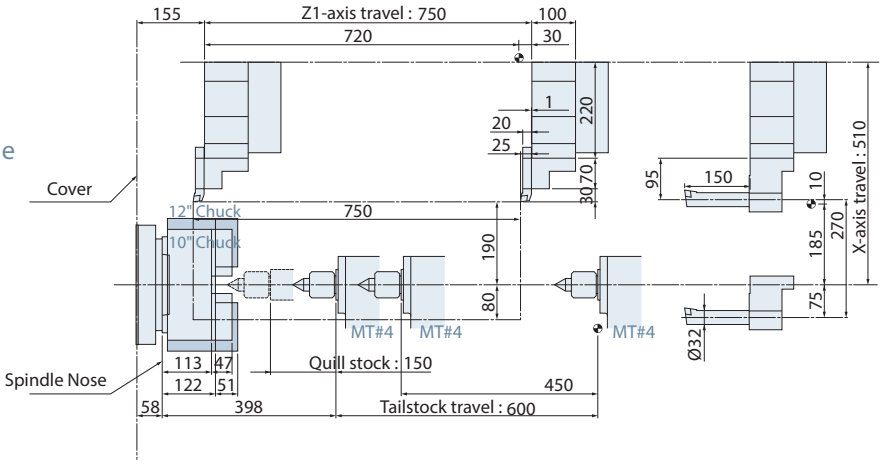

Live tool ►

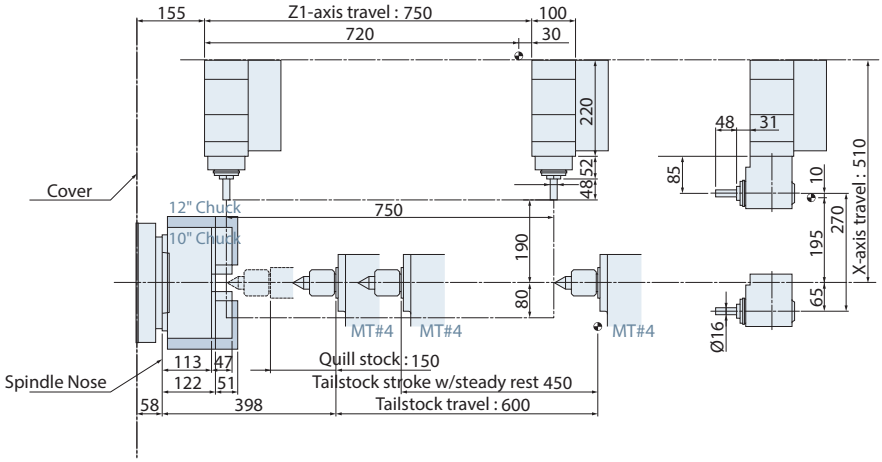

Work Range

Servo driven programmable live center MT#4 tail stock

Turning tool ►

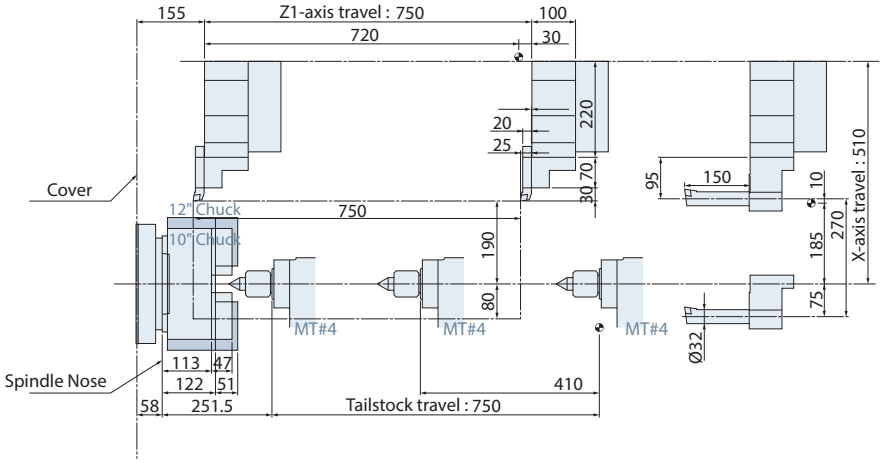

Live tool ►

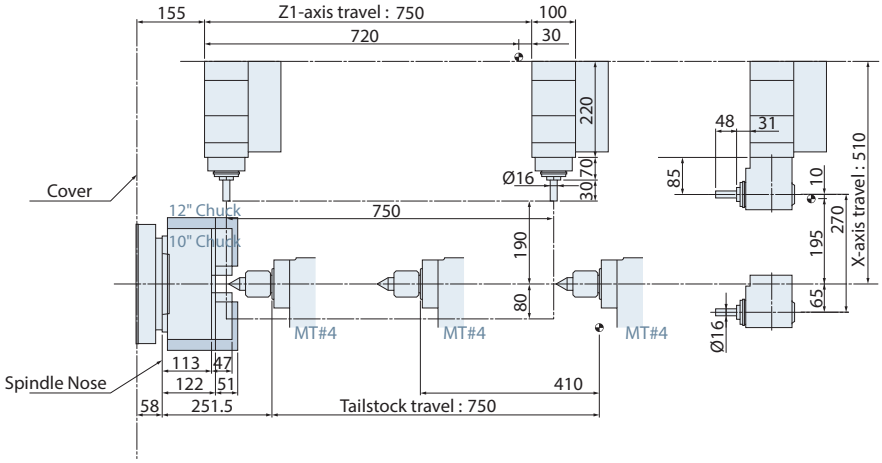

16-Station Live Tooling Turret

Work Range

8" chuck sub-spindle

Turning tool ▶

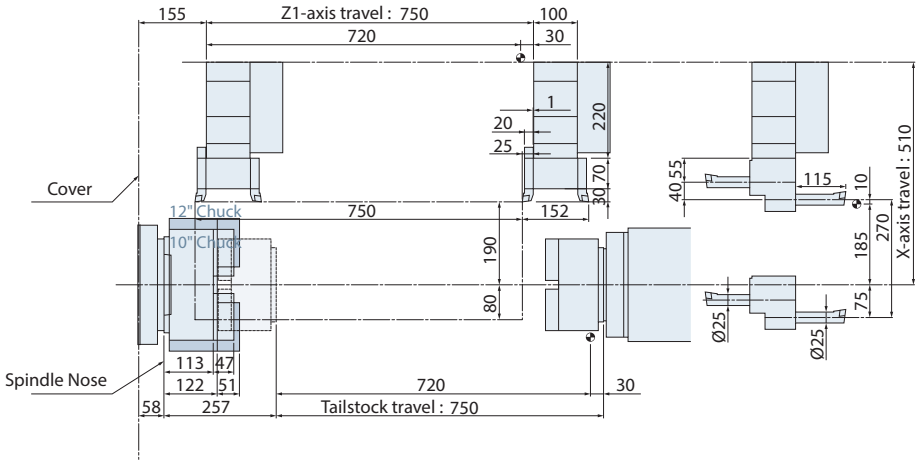

Live tool ▶

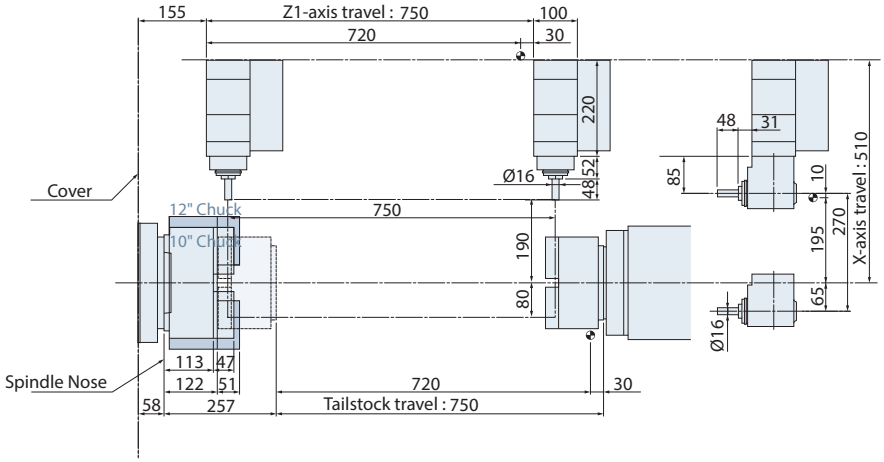

Work Range

Servo driven type tail stock for dead center MT#3

Turning tool ▶

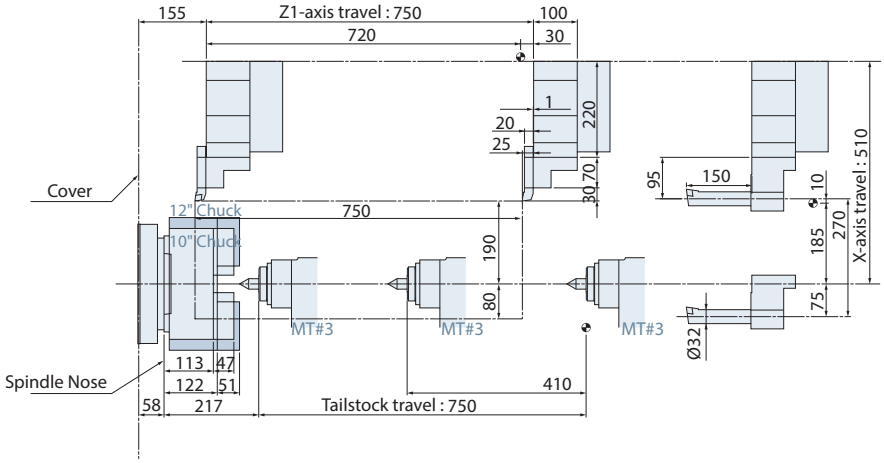

Live tool ▶

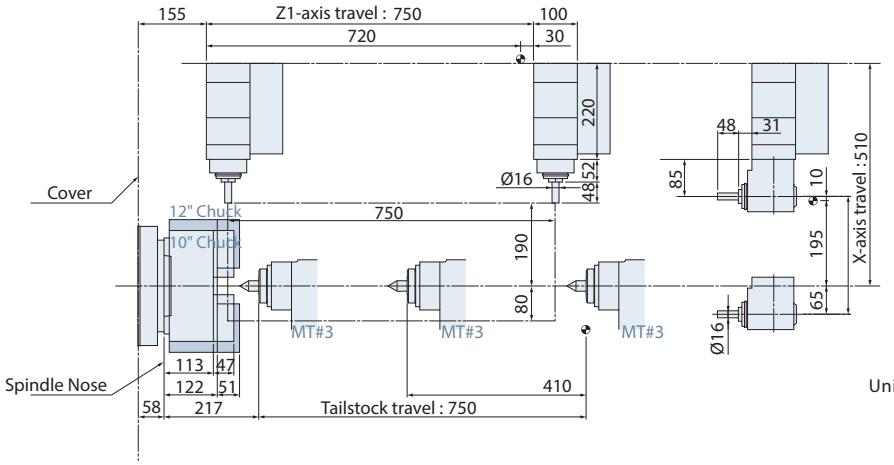

Unit : mm

FEATURES

S : Standard O : Option
– : Not Availabl C : Contact GOODWAY

		GLS-2800	GLS-3300
SPINDLE			
Main spindle motor configuration	Belt driven	S	S
Rigid tapping & spindle orientation		S	S
Spindle disk brake		O	O
Cf-axis & spindle disk brake*1		O	O
Sub-spindle & 8" hydraulic cylinder		O	O
WORK HOLDING			
Hydraulic hollow cylinder for chuck	10"	S	–
	12"	–	S
Hydraulic hollow 3-jaw chuck	10"	S	–
	12"	–	S
Hard jaws		O	O
Collet chuck		O	O
Special work holding chuck		C	C
In spindle work stopper		O	O
Spindle liner (guide bushing)		O	O
Foot switch for chuck operation		S	S
Quill hydraulic tailstock		O	O
MT#4 live center		O	O
Foot switch for tailstock operation		O	O
Two-stage programmable pressure	Chuck clamping	O	O
	Tailstock thrust	O	O
TURRET			
10-station turret		O	O
12-station turret		S	S
12-station live tooling turret		O	O
16-station live tooling turret		O	O
Tool holder & sleeve package		S	S
Live tooling tool holders (0˚x2, 90˚x2)*1		O	O
MEASUREMENT			
RENISHAW HPMA tool presetter		O	O
COOLANT			
Coolant pump	3 kg/cm²	S	S
	5 kg/cm²	O	O
	10 kg/cm²	O	O
High-pressure coolant system	20 kg/cm²	C	C
Roll-out coolant tank		S	S
Oil skimmer		O	O
Coolant flow switch		O	O
Coolant level switch		O	O
Coolant intercooler system		O	O
CHIP DISPOSAL			
Chip conveyor with auto timer	Right discharge	S	S
	Rear discharge	C	C
Chip cart with coolant drain		O	O
Chuck air blow		O	O
Tailstock air blow		O	O
Coolant gun		O	O
Oil mist collector		O	O
AUTOMATIC OPERATION SUPPORT			
Parts catcher		O	O
Work-piece transport conveyor		O	O
Bar feeder		O	O
Bar feeder interface		O	O
Gantry-type loader / unloader		O	O
Auto door		O	O
Extra M-code output	4 sets (8)	O	O
	8 sets (16)	O	O
SAFETY			
Fully enclosed guarding		S	S
Door interlock (incl. Mechanical lock)		S	S
Impact resistant viewing window		S	S
Tailstock stroke out-end check		S	S
Chuck cylinder stroke out-end check		S	S
Chuck cylinder check valve		S	S
Low hydraulic pressure detection switch		S	S
Over travel (soft limit)		S	S
Load monitoring function*2		O	O

		GLS-2800	GLS-3300
OTHERS			
Tri-color operation status light tower		S	S
Florescent work light		S	S
External work light		O	O
Electrical cabinet	Heat exchanger	S	S
	A/C cooling system	O	O
Complete hydraulic system		S	S
Advanced auto lubrication system		S	S
Foundation leveling & maintenance tool kit		S	S
Emergency maintenance electrical part package		S	S
Operation & maintenance manuals		S	S

		Oi-TF	31i
FANUC CONTROL FUNCTIONS			
Display	10.4" color LCD	S	S
Graphic function	Standard	S	S
	Dynamic	O	O
Part program storage size	512K bytes	S	–
	1M bytes	–	S
	2M bytes	O	O
	4M bytes	–	O
	8M bytes	–	O
Registerable programs	400	S	–
	1,000	O	S
	4,000	–	O
Tool offset pairs	99	–	S
	128	S	–
	200	O	O
	400	–	O
	499	–	O
	999	–	O
	2000	–	O
Servo HRV control	HRV 3	S	S
Automatic data backup		S	S
Synchronous / Composite control		O	O
Inch / metric conversion		S	S
Polar coordinate interpolation		S	S
Cylindrical interpolation		S	S
Multiple repetitive cycle		S	S
Rigid tapping		S	S
Unexpected disturbance torque detection function		S	S
Spindle orientation		S	S
Constant surface speed control		S	S
Spindle speed fluctuation detection		S	S
Embedded macro		O	O
Spindle synchronous control		S	S
Background editing		S	S
Tool radius / Tool nose radius compensation		S	S
Multi-language display		S	S
Cs contouring control		S	S
Polygon turning		S	S
Helical interpolation		O	O
Direct drawing dimension programming		S	S
Thread cutting retract		S	S
Variable lead threading		S	S
Multiple repetitive cycle Ⅱ		S	S
Canned cycles for drilling		S	S
Tool nose radius compensation		S	S
Chamfering / Corner R		S	S
AI contour control Ⅰ		O	S
Multi part program editing		S	S
Manual handle retrace		O	O
Manual intervention and return		S	O
External data input		S	S
Addition of custom macro		S	S
Increment system C		S	S
Run hour & parts counter		S	S
Auto power-off function		S	S
RS-232 port		S	S
Memory card input / output (CF + USB)		S	S
Ethernet		S	S

*1 Available for live tooling turret or Y-axis model.
*2 Available for O*i*-TF controller.

MACHINE SPECIFICATIONS

■ : Metric ■ : Inch

CAPACITY		GLS-2800	GLS-3300
Max. swing diameter		Ø 760 mm 30"	
Swing over saddle		Ø 440 mm 17.32"	
Max. turning diameter		Ø 440 mm 17.32"	
Standard turning diameter		Ø 254 mm 10"	
Max. turning length		720 mm 28.35"	710 mm 27.95"
Hydraulic chuck		10"	12"
Bar capacity		Ø 75 mm 3"	Ø 90 mm 3.5"
SPINDLE			
Hole through spindle		Ø 90 mm 3.5"	Ø 101 mm 4"
Spindle bearing diameter		Ø 130 mm 5.12"	Ø 140 mm 5.51"
Hydraulic cylinder		10"	12"
Spindle nose		A2-8	A2-8
Motor output (cont. / 30 min.)	High	11 / 15 kW 15 / 20 HP	15 / 18.5 kW 20 / 25 HP
	Low	7.5 / 15 kW 10 / 20 HP	11 / 18.5 kW 15 / 25 HP
Motor full output speed		750 RPM	575 RPM
Spindle drive system		Direct Belt Drive	
Spindle drive ratio		7 : 12	7 : 12
Spindle speed range		3,500 RPM	3,000 RPM
Spindle full output speed		438 RPM	335 RPM
C-AXIS SPINDLE (OPTIONAL)			
Cf-axis drive motor		FANUC AC Servo motor	
Min. spindle indexing angle		± 0.001°	
Dynamic accuracy		± 0.002°	
X & Z AXES			
X-axis travel		250 mm 9.84"	
Z-axis travel		750 mm 29.53"	
X / Z axes rapids		30 m/min. 1,181 IPM	
Slide way type		Linear Guide Way	
Feed rates		1~ 4,800 mm/min. 1 ~ 189 IPM	
X-axis servo motor		AC 2.7 kW 3.6 HP	
Z-axis servo motor		AC 2.7 kW 3.6 HP	
X-axis ball screw Ø / pitch		Ø 36 mm / Pitch 8 1.42"	
Z-axis ball screw Ø / pitch		Ø 40 mm / Pitch 8 1.5"	
X / Z axes thrust (cont.)		X : 960 kgf 2,100 lbf / Z : 1,410 kgf 3,100 lbf	
TURRET			
Stations		12 / 10	
Indexing drive		FANUC AC Servo motor	
Indexing speed		0.3 sec. Adjacent / 0.5 sec. 180 degrees (Single step)	
Accuracy		Positioning : ± 0.00069°, Repeatability : ± 0.00027°	
O.D. tool shank size		□ 25 mm 1"	
I.D. tool shank size		Ø 40 mm 1-1/2"	

Specifications are subject to change without notice.

MACHINE SPECIFICATIONS

12-STATION LIVE TOOLING TURRET (OPT.)	GLS-2800	GLS-3300
Max. turning length	720 mm 28.34"	710 mm 27.95"
Stations	12	
Live tooling stations	12 (Live tooling tools rotate in working position only.)	
Live tooling drive motor	3.7 / 5.5 kW (cont. / 30 min.) 5 HP / 7 HP	
Live tooling torque	23.5 / 35 Nm (cont. / 30 min.) 17.3 / 25.8 lb-ft	
Index speed	0.3 sec. Adjacent / 0.5 sec. 180 degrees (Single step)	
O.D. tool shank size	□ 25 mm 1"	
I.D. tool shank size	Ø 40 mm 1-1/2"	
Live tooling shank size	ER32 (Ø 20 mm) 3/4"	
Live tooling RPM range	6,000 RPM	
16-STATION LIVE TOOLING TURRET (OPT.)		
Max. turning length	680 mm 26.7"	
Stations	16	
Live tooling stations	16	
Live tooling drive motor	3.7 / 5.5 kW (cont. / 30 min.) 5 HP / 7 HP	
Live tooling torque	23.5 / 35 Nm (cont. / 30 min.) 17.3 / 25.8 lb-ft	
Index speed	0.3 sec. Adjacent / 0.5 sec. 180 degrees (Single step)	
O.D. tool shank size	□ 20 mm 1"	
I.D. tool shank size	Ø 32 mm 1-1/2"	
Live tooling shank size	ER25 (Ø16 mm) 5/8"	
Live tooling RPM range	6,000 rpm	
Y-AXIS (OPT.)		
Max. turning diameter	Ø 400 mm 15.75"	
Max. turning length	720 mm 28.35"	710 mm 27.95"
Max. Y-axis travel	100 (-50 , +50) mm 4" (±2")	
Y-axis axes rapids	12 m/min. 472 IPM	
Slide way type	Linear Guide Way	
Feed rates	1 ~ 4,800 mm/min. 1 ~ 189 IPM	
Y-axis servo motor	AC 2.7 kW 3.6 HP	
Y-axis ball screw Ø / pitch	Ø 36 mm / Picth 8 1.42"	
Y-axis thrust (cont.)	960 kgf 2,100 lbf	
TAILSTOCK (OPT.)		
Quill center taper	MT#4 (Live center)	
Quill diameter / travel	Ø 70 mm / 150 mm 2.76" / 5.9"	
Tailstock base travel	600 mm 23.62"	
Programmable quill / base	Yes / Yes	
Programmable base type	Positioned by Z-axis carriage	

Specifications are subject to change without notice.

SUB-SPINDLE (OPT.)	GLS-2800	GLS-3300
Hole through spindle	Ø 66 mm 2.59"	
Bar capacity	Ø 51 mm 2"	
Spindle bearing diameter	Ø 100 mm 4"	
Spindle nose	A2-6	
Motor output	7.5 / 11 kW (cont. / 30 min.) 10 HP / 15 HP	
Spindle drive system	Direct Belt Drive	
Spindle drive ratio	2 : 3	
Spindle speed range	5,000 RPM	
Spindle full output speed	1,000 RPM	
Spindle torque	72 / 105 Nm (cont. / 30 min.) 53 / 77 lb-ft	
Z2-axis travel	750 mm 29.53"	
Z2-axis rapids	30 m/min. 1,181 IPM	
Slide way type	Linear Guide Way	
Z2-axis ball screw Ø / pitch	Ø 36 mm / Pitch 10 1.42"	
Z2-axis thrust (cont.)	960 kgf 2,100 lbf	
GENERAL		
Repeatability	± 0.003 mm ± 0.00012"	
Positioning accuracy	0.015 mm 0.00059"	
CNC controller	FANUC O*i*-TF (opt. 31*i*)	
Voltage / Power requirement	AC 200 / 220 +10% to -15% 3 phase / 30 kVA	
Hydraulic capacity	30 L 7 gal	
Coolant tank capacity	350 L 92 gal	
Coolant pump / pressure	0.5 kW (3/4 HP , 60 Hz) rated at 3 bar (43.5 PSI)	
Machine weight	6,000 Kg 13,300 lb Machine w / Y-axis : 6,500 Kg 14,400 lb	
Dimensions L × W × H	3,350 x 2,100 x 1,905 mm 132" x 83" x 75" Machine w / Y-axis : 3,350 x 2,100 x 2,255 mm 132" x 83" x 89"	

Specifications are subject to change without notice.

MACHINE DIMENSIONS

GLS-2800 / GLS-3300

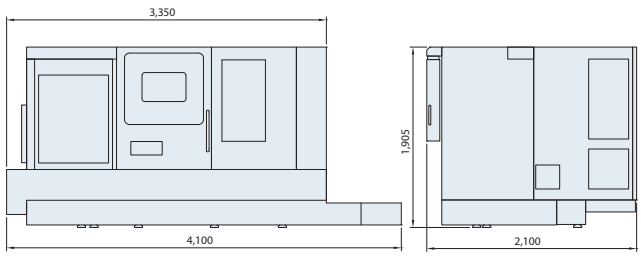

Y-axis model

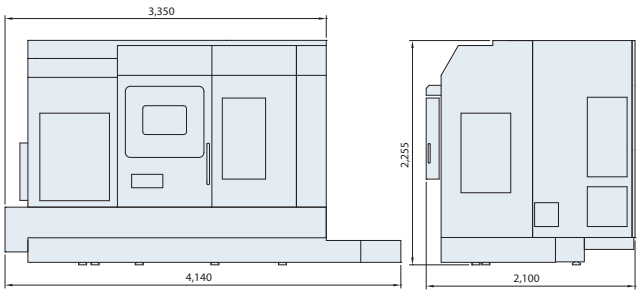

Unit : mm

THE ULTIMATE MACHINING POWER

GOODWAY®

GOODWAYCNC.com

GOODWAY MACHINE CORP.

Official distributor for Benelux

THOLITEC

Jan Doustraat 37
1689 XK Zwaag (NH)
The Netherlands

Tel. +31(0)85 0022937
info@tholitec.nl
www.tholitec.nl

Copyright 2020 by Goodway Machine Corp. All rights reserved

G-GLS-2800/3300-EN-202003