GLS-1500 SERIES

HIGH SPEED CNC TURNING CENTERS

THE ULTIMATE MACHINING POWER

WOODWAY®

HIGH SPEED CNC TURNING CENTERS

With the latest machine tools technology and precision turning performance, GOODWAY brings you the new GLS-1500 series high speed CNC turning center. Using 2 types of bed combined with super rigidity, high speed turning capability and compact size provides you with super efficiency cutting power. The GLS-1500 series equipped with an optional live tooling turret, Y-axis and sub-spindle can work on turning, milling, drilling tasks at the same time to increase the output capacity with high end value to meet your needs of today and tomorrow.

- 30˚ slant-bed design provides smooth chip disposal and easier operator access.
- Steel way covers and special steel wipers molded with industrial strength rubber are used for durability.
- Fully enclosed splashguards keep chips and coolant contained for a safe clean working environment.
- The auto lubrication system delivers metered amounts of lubrication to the slide ways, ball screws, and vital components. Distribution is automatically shut off during idling to prevent waste.

(GLS-1500 model shown.)

SERIES		GLS-1500 SERIES	GLS-2000 SERIES
Chuck size		6"	8"
Bar Capacity		Ø 51 mm (2.00")	Ø 65 mm (2.55")
Turning Length	330 mm (12.99")	GLS-1500	GLS-2000
	630 mm (24.80")	GLS-1500L	GLS-2000L

※ Live tooling turret, C-axis, Y-axis function and sub-spindle are available.
※ Y-axis and sub-spindle is only applicable to the "L" series.

(GLS-1500LYS model shown with optional accessories.)

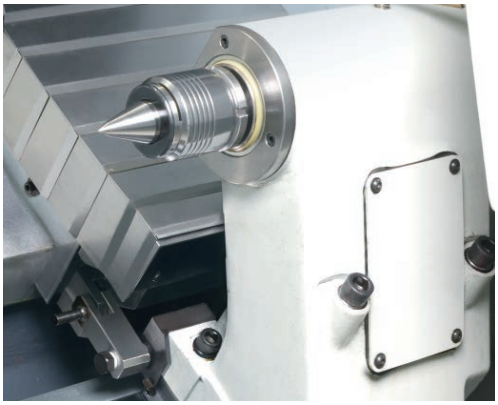

- Z-axis carriage manual locks onto the tailstock base and moves it to the desired position with precision accuracy.
- The extension of the shaft can be controlled by program, which makes it easier to insert the center into the center hole.

- Large 100L separate type coolant tank provides optimal heat dispersion and lower coolant temperature, which will help extend coolant life.

- Compact structure and cover design minimizes factory space usage which increases efficiency.

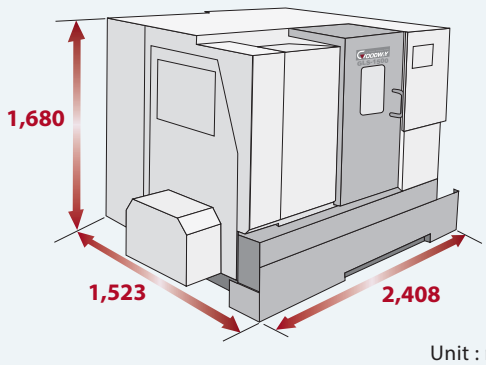

Unit : mm

MAXIMUM STRENGTH CONSTRUCTION

- Major structural components have been combined into one solid platform. The low center of gravity 30˚ slant bed design provides the most rigid foundation possible for the headstock, turret, and tailstock.
- Built to withstand years and years of rigorous high production turning, the heavily ribbed, one-piece, thermally balanced bed and casting parts are of "MEEHANITE" casting. The 30 degrees true slant bed design further provides superior support for the headstock, turret, and tailstock, thus, creating the rigidity needed for long-term high precision turning and efficient chip removal.
- By using Finite Element Analysis (FEA), optimal reinforce ribbings are directly cast into the one-piece bed structure. Mechanical rigidity has been increased by more than 20% when compared to conventional designs. The GLS-1500 series is capable of performing heavy-duty turning and maintaining long-term high-precision accuracy. More rigidity also means extended tool life.

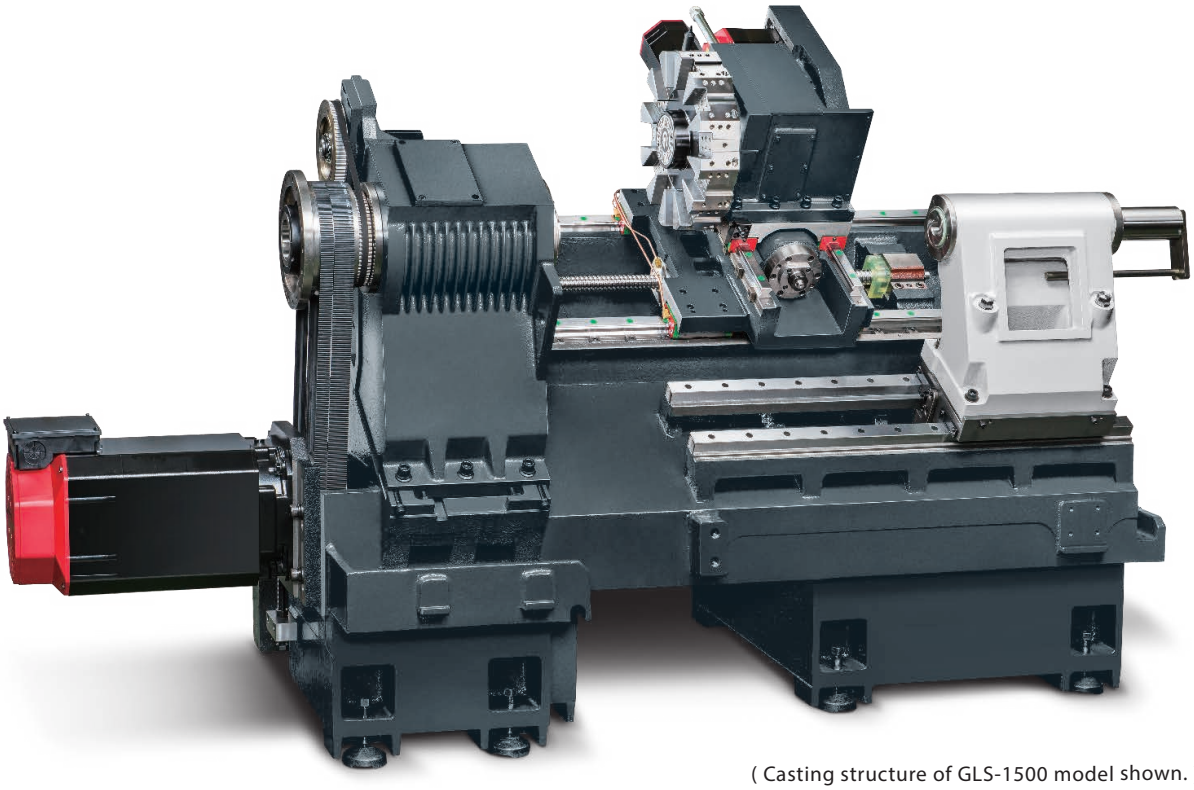

(Casting structure of GLS-1500 model shown.)

- C3 class hardened and precision ground ball screws ensure the highest accuracy and durability possible.

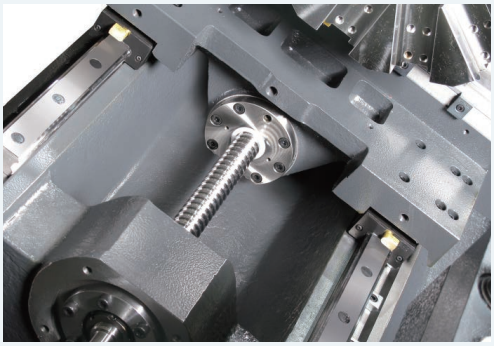

- X & Z axes utilize high performance linear guide way design which provides high precision high speed and low abrasion advantages.

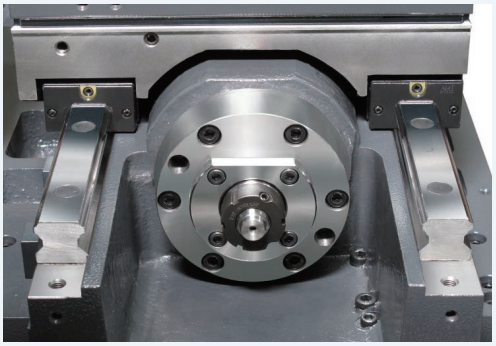

ULTIMATE TURNING POWER

- The heavily ribbed, one-piece thermally balanced headstock and heat dispensing fins evenly dispense heat to reduce deformation, therefore, increasing machining accuracy.
- Standard rigid tapping feature provides high-speed precision tapping without the use of floating tap holders. Set-up is easier and depth of thread more accurate, permitting maximum productivity for tapping operations.
- The precision direct belt drive system provides greater spindle control, flexibility and serviceability. Pulley ratios fine tune the motor's maximum RPM to match the spindle's maximum RPM, which result in full output at the lowest RPM possible.
- GLS-1500 models are available with built-in spindle motors, which eliminate traditional belts and pulleys. This advanced system provides faster spindle response, reduces vibration and power loss, which translate to faster cycle times, higher accuracy, and lowers maintenance costs.

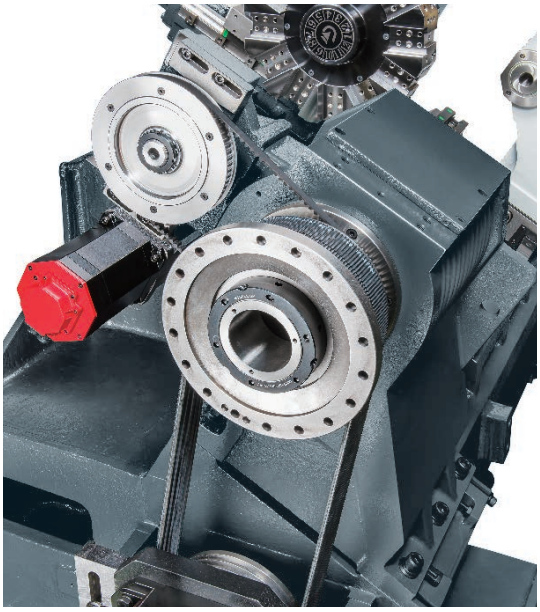

Spindle Output

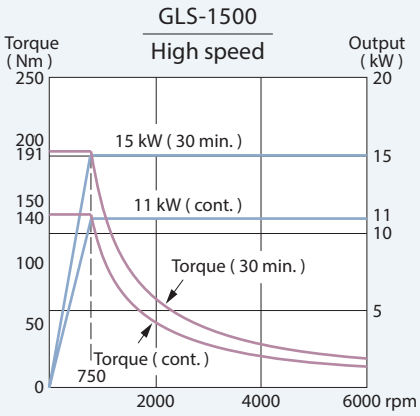

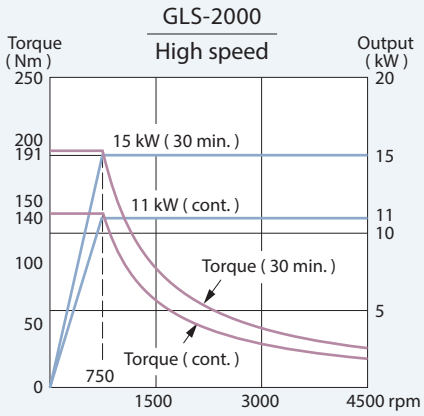

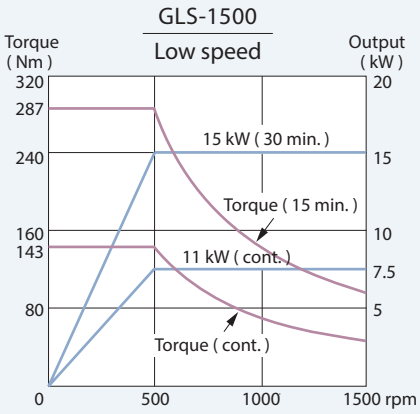

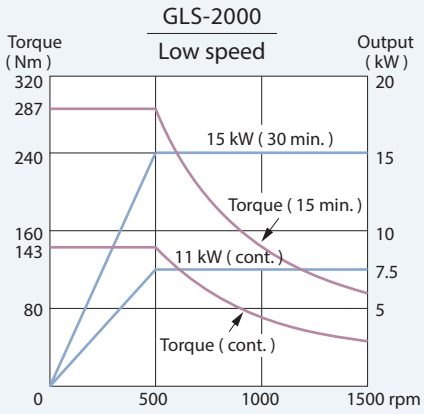

Built-in Spindle Output

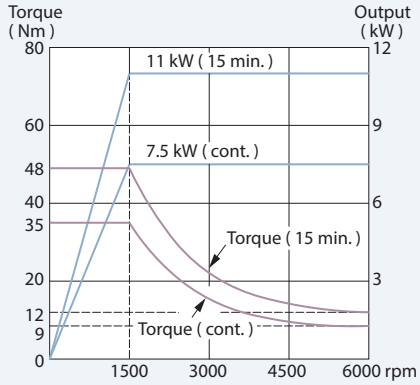

ADVANCED TURRET TECHNOLOGY

- A high-speed servo motor indexing system provides the 10 or 12-station turret with a 0.2 sec. indexing time. Large diameter high precision curvic couplings and hydraulic clamping are used to enhance tool indexing accuracy and turret disk rigidity.
- The curvic couplings provide a large contact area and are designed with an auto-clean feature not seen on traditional couplings.

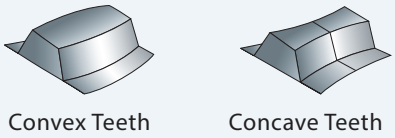

Curvic Coupling

- Optional 24-tool turret and gang type turret are available to provide you with more machining flexibility.

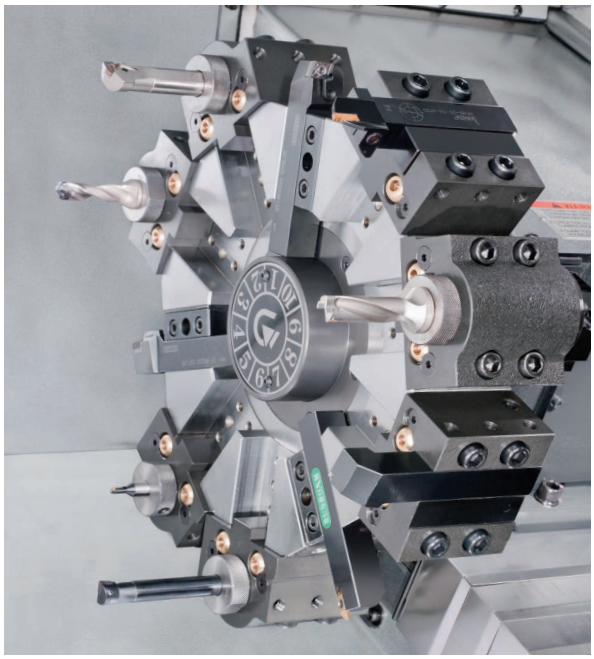

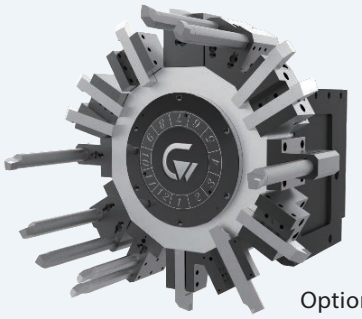

Optional 24-station Turret

Optional Gang Type Turret

LIVE TOOLING TURRET

- Live tooling and C-axis control capabilities on the GLS-1500 series allow the machine to perform multiple tasks on a work-piece, such as turning, milling, drilling and tapping. This eliminates manpower and cycle time, while reducing accuracy lost, which will occur if the part is moved from one machine to another.
- GOODWAY live tooling turret utilizes advanced servo indexing technology to achieve 0.2 second indexing time for adjacent stations and 0.5 second for stations at the opposite end of the disk.
- With the latest technology, live tooling is driven by an AC servo motor to provide ample power, in the form of torque. Now, even the toughest of jobs may be tackled without a sweat.

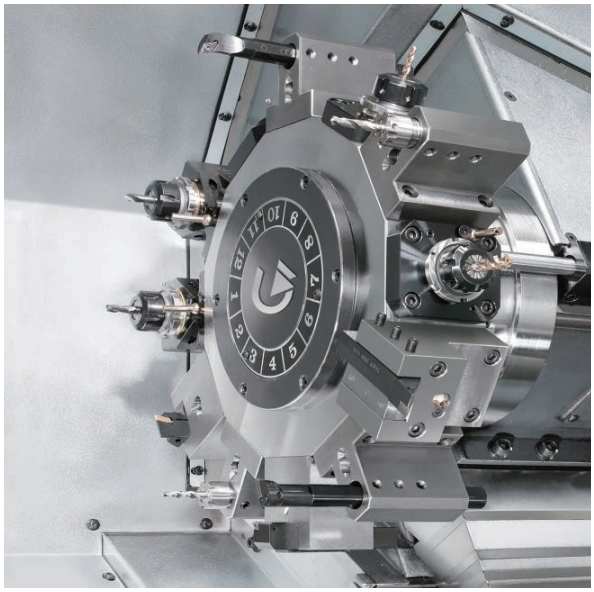

BACK-END MACHINING CAPABILITY

- A 5" chuck size sub-spindle driven by a powerful 5.5 kW (7 HP, 5 min.) built-in type FANUC motor (Integrated Motor) for back-end machining is available on the GLS-1500L series.
- The Z2-axis movement of the sub-spindle is applied with high performance linear guide way design which provides high speed high precision and low abrasion advantages.

Sub-spindle Output

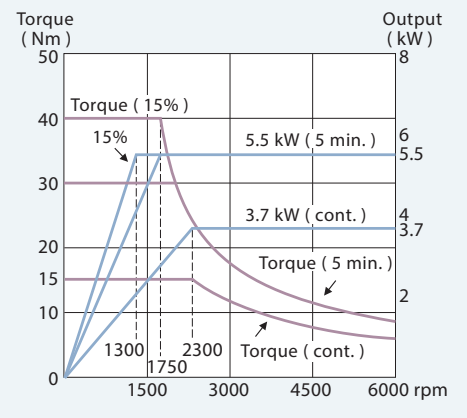

- Automatic part transfer of work-piece from main spindle to sub-spindle saves manpower and cycle time, while reducing accuracy lost, which will occur if manually handling the part from machine to machine.

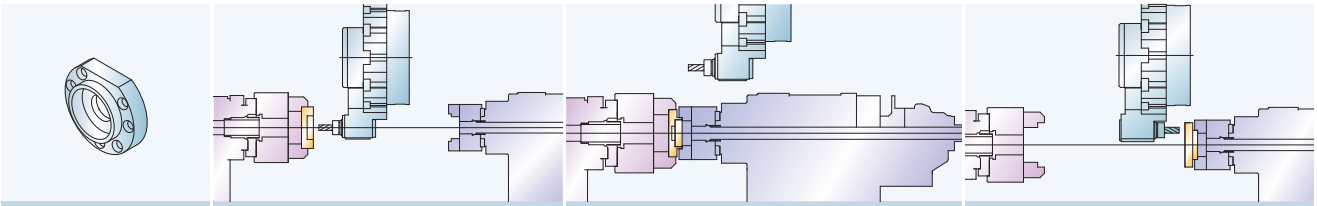

A. Large diameter parts. | A1. Main spindle machining of front-end. | A2. Part transfer to sub-spindle. | A3. Sub-spindle machining of back-end.

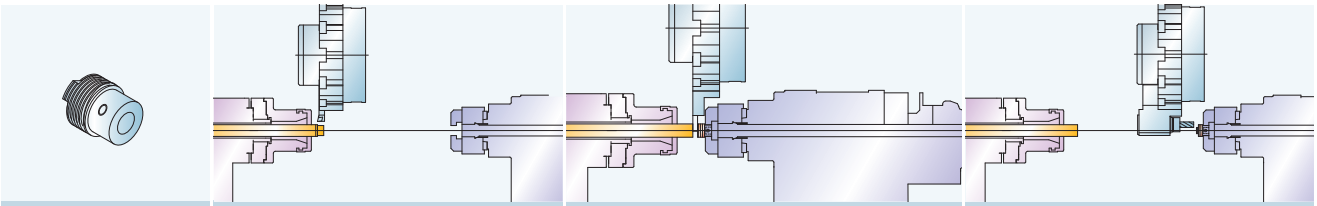

B. Parts from bar stock. | B1. Main spindle machining of front-end. | B2. Bar pull-out & part cut-off with main & sub spindles synchronization. | B3. Sub-spindle machining of back-end.

- With Ø 32 mm (1.25") bar capacity, the sub-spindle configuration is also ideal for machining long work-pieces such as small diameter shafts. Both ends of the work-piece can be supported by the main and sub spindles, allowing the middle section(s) to be accurately machined.

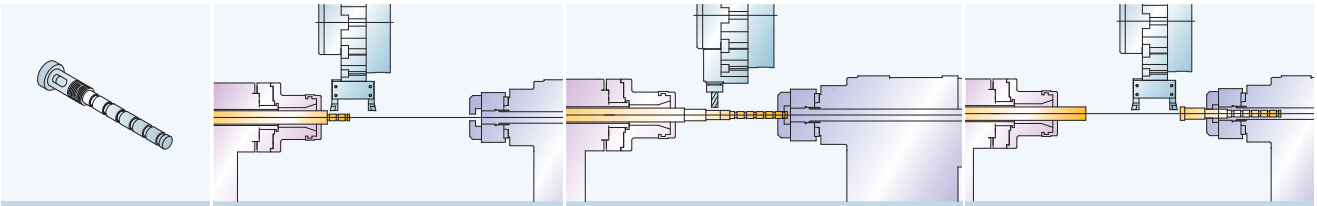

C. Long shaft parts. | C1. Main spindle machining of front-section. | C2. Pull-out & machining of mid-section(s) with main & sub spindles supporting work-piece. | C3. Sub-spindle machining of back-section.

Y-AXIS MACHINING CAPABILITY

- Y-axis control further enhances multi-tasking live tooling capabilities and improves various machining precision. High precision grooving and X-axis off-center drilling are enabled.

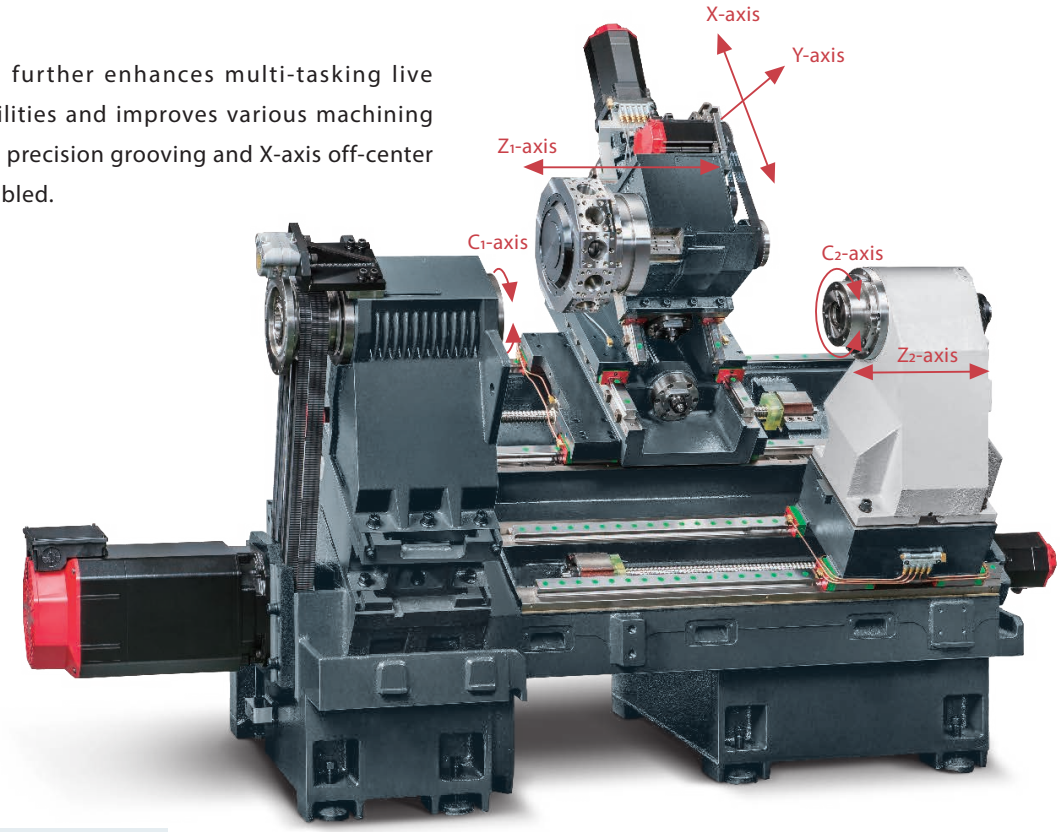

(Casting structure of GLS-1500LYS series shown.)

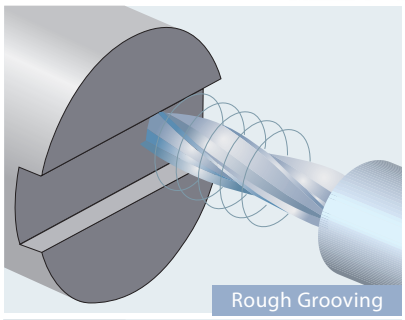
Rough Grooving

- On Y-axis equipped machines, the turret is mounted on a secondary 30 degrees wedge saddle on top of the X-axis slide. Both X & Y axes have extra wide linear guide ways to provides maximum strength.

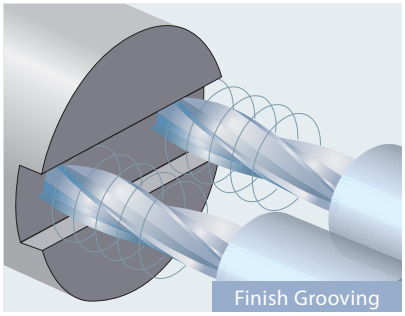
Finish Grooving

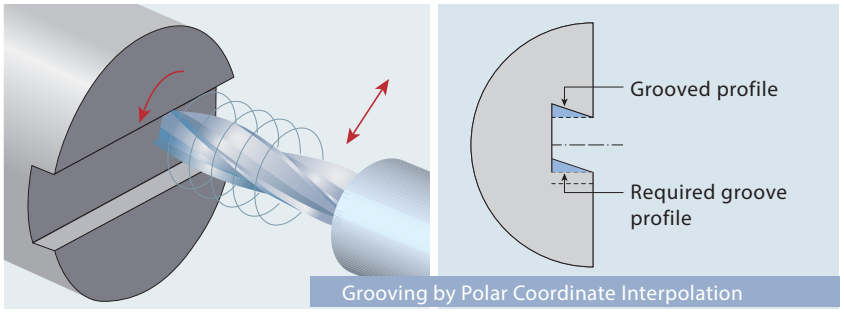

Grooving by Polar Coordinate Interpolation

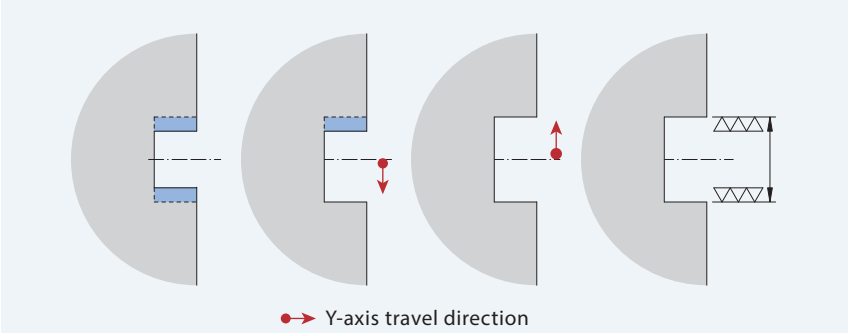

Grooving with Finish Pass Using Y-axis

- Grooving with Y-axis control produces grooves with higher accuracy.

MACHINING PERFORMANCE

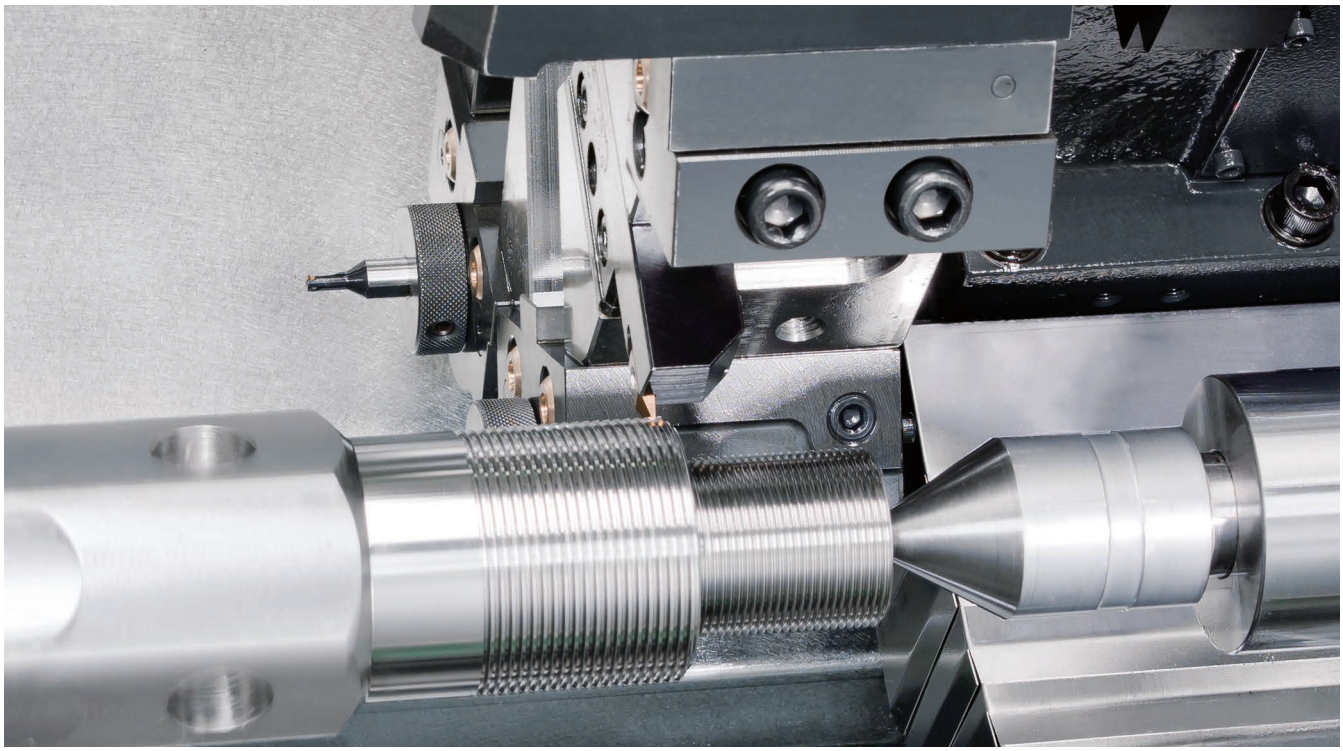

Turning Capability

Test Model	Work-piece		Cutting Condition				Power Requirement
GLS-1500	Material	Diameter (mm)	Spindle Speed (rpm)	Cutting Speed (m/min.)	Cutting Depth (mm)	Feedrate (mm/rev)	Spindle Load (%)
Heavy Cutting	S45C	Ø 50	1,050	165	4	0.25	126 / 38
Drill	S45C	Ø 40	954	120	—	0.13	—

Machining Capability

Test Model	Work-piece		Cutting Condition				Power Requirement
GLS-1500M	Material	Diameter (mm)	Spindle Speed (rpm)	Cutting Speed (m/min.)	Cutting Depth (mm)	Feedrate (mm/min.)	Spindle Load (%)
Drill	S45C	Ø 13	610	25	—	183	160 / 80
End Mill	S45C	Ø 13	490	30	15	122	180 / 30
Tapping	S45C	M12 x P1.75	400	15	—	700	200 / 27

Interference Diagram

【 12-Station Turret 】

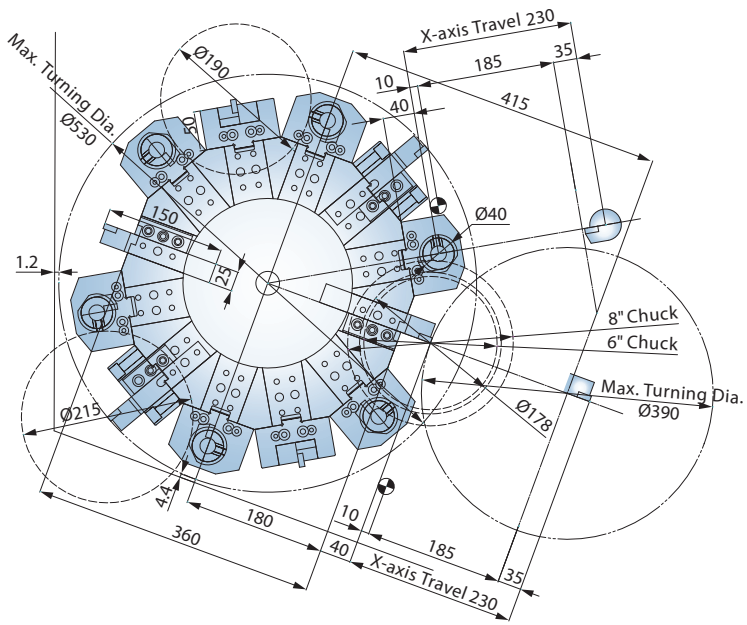

Tooling System

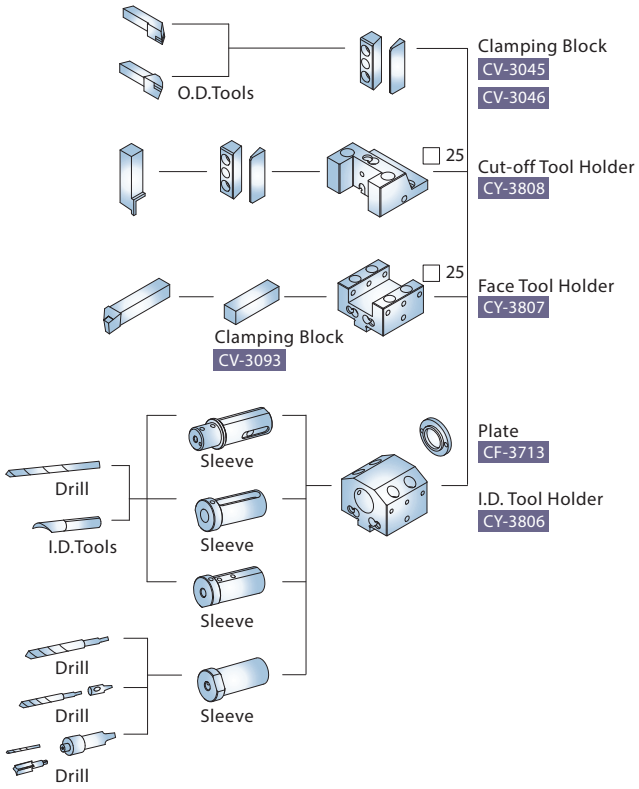

【 10-Station Turret 】

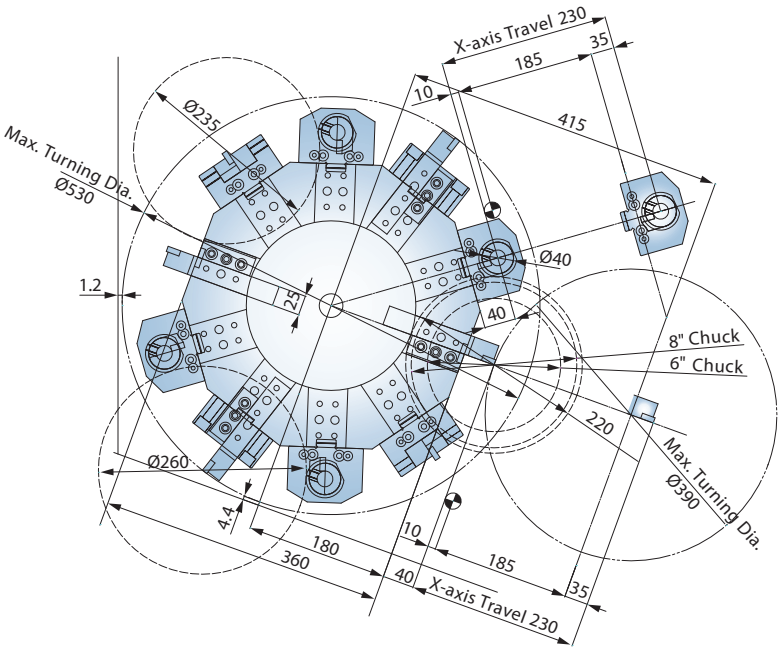

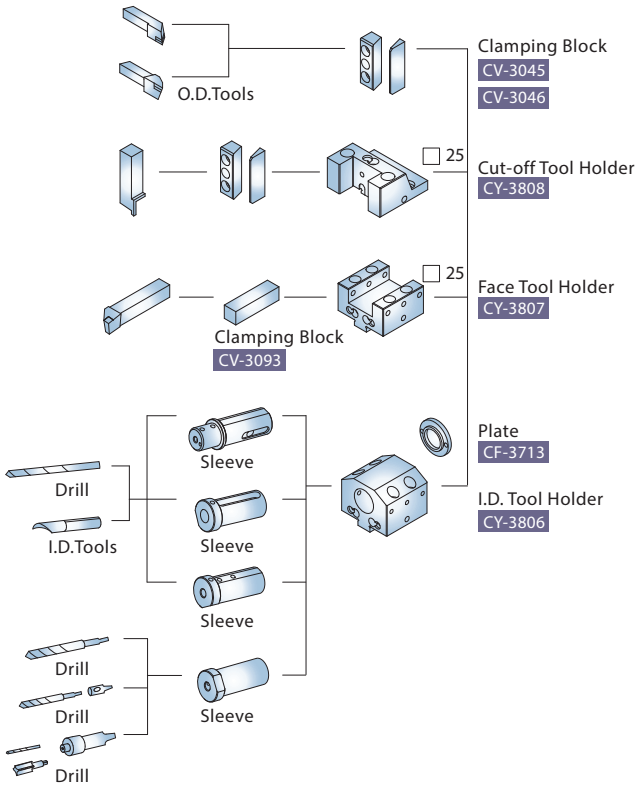

Unit : mm

Interference Diagram

【 Live Tooling Turret 】

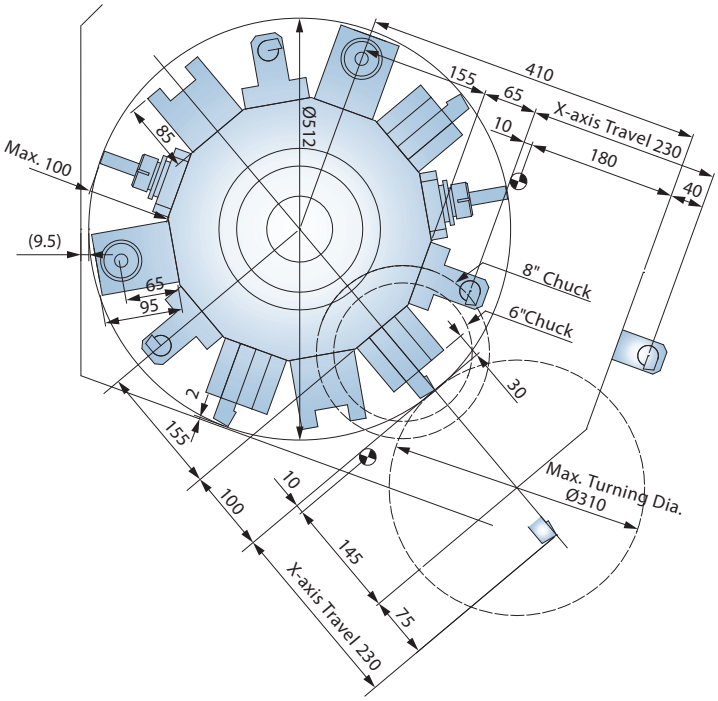

Tooling System

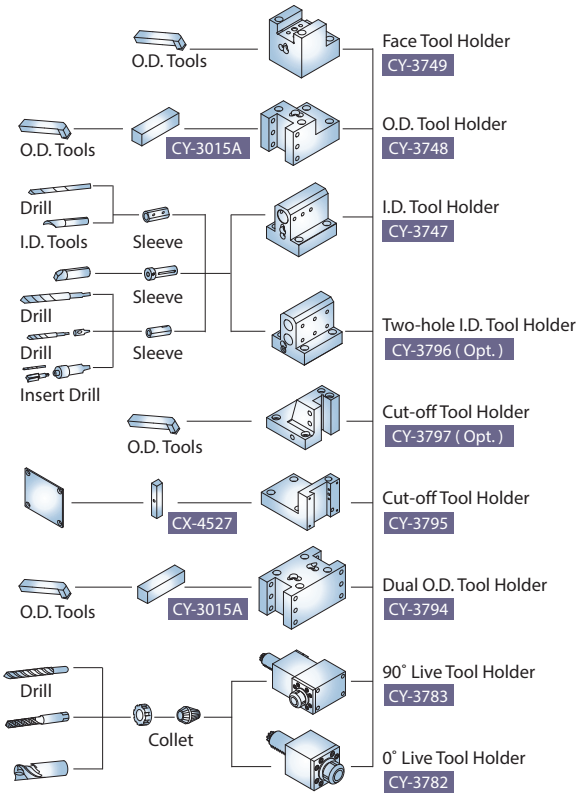

【 Y-axis 】

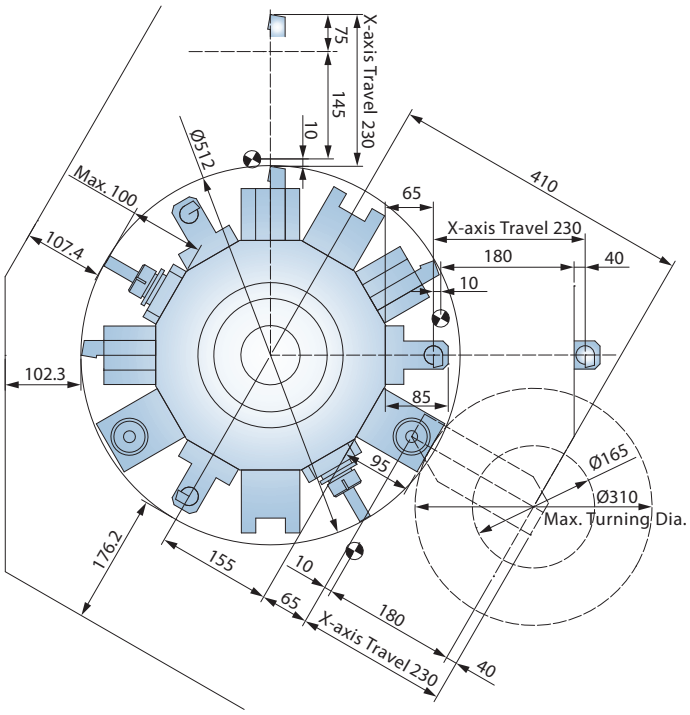

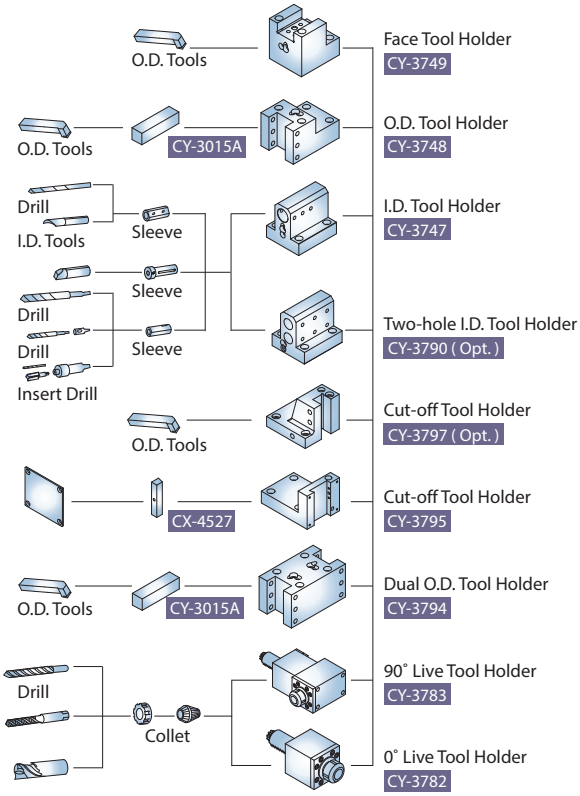

Unit : mm

Work Range

【 12-Station Turret / 10-Station Turret 】

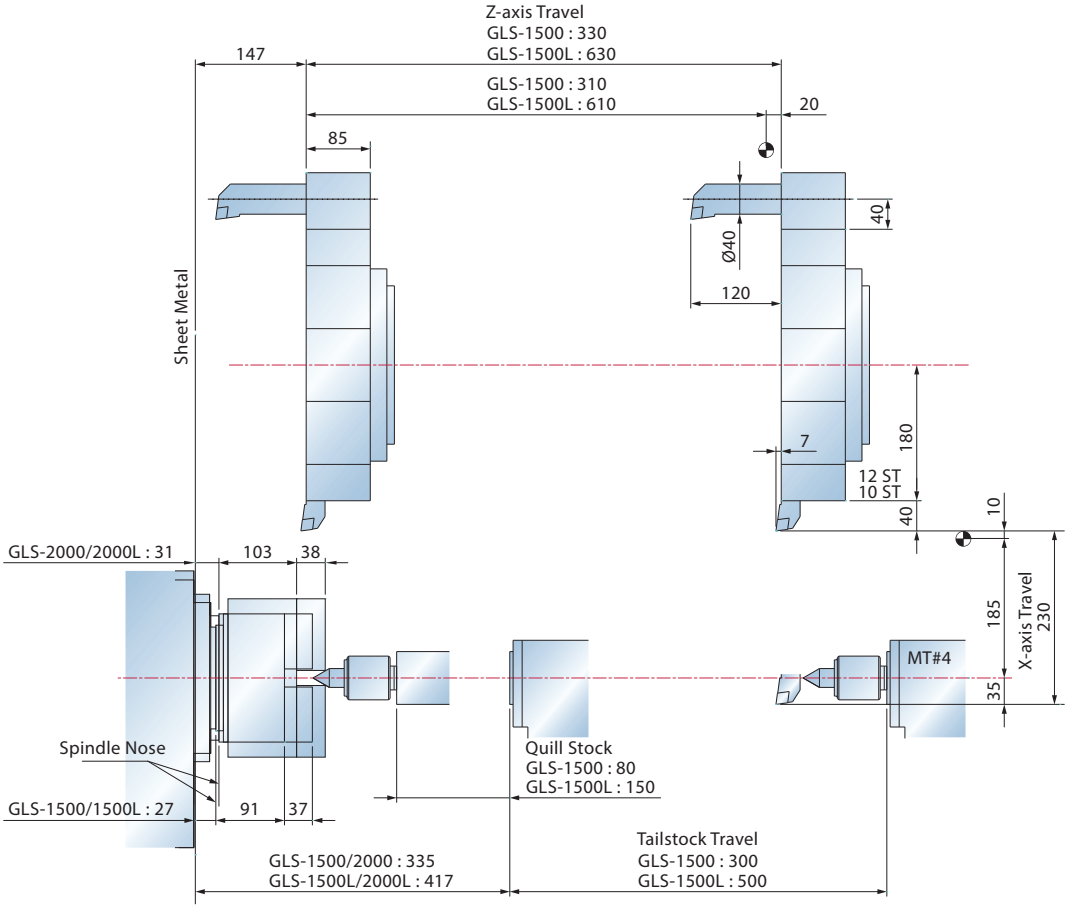

【 Gang Type Turret 】

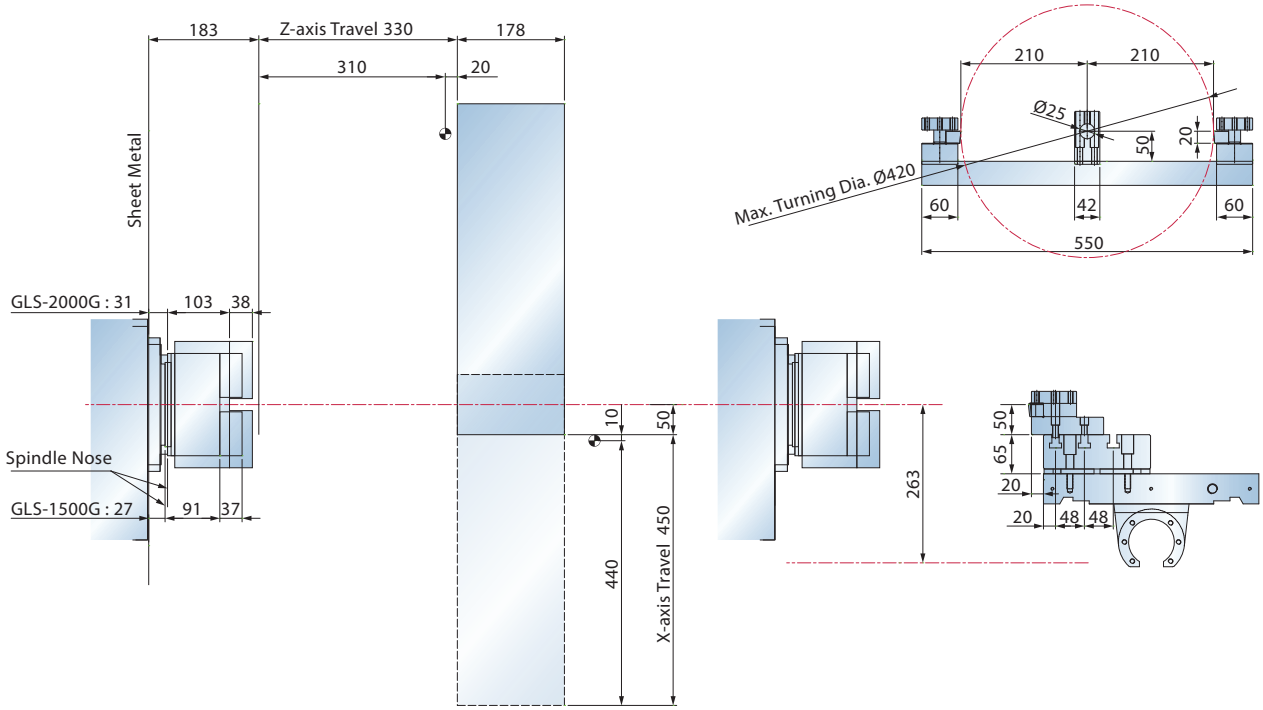

Unit : mm

Work Range

【 Live Tooling Turret 】

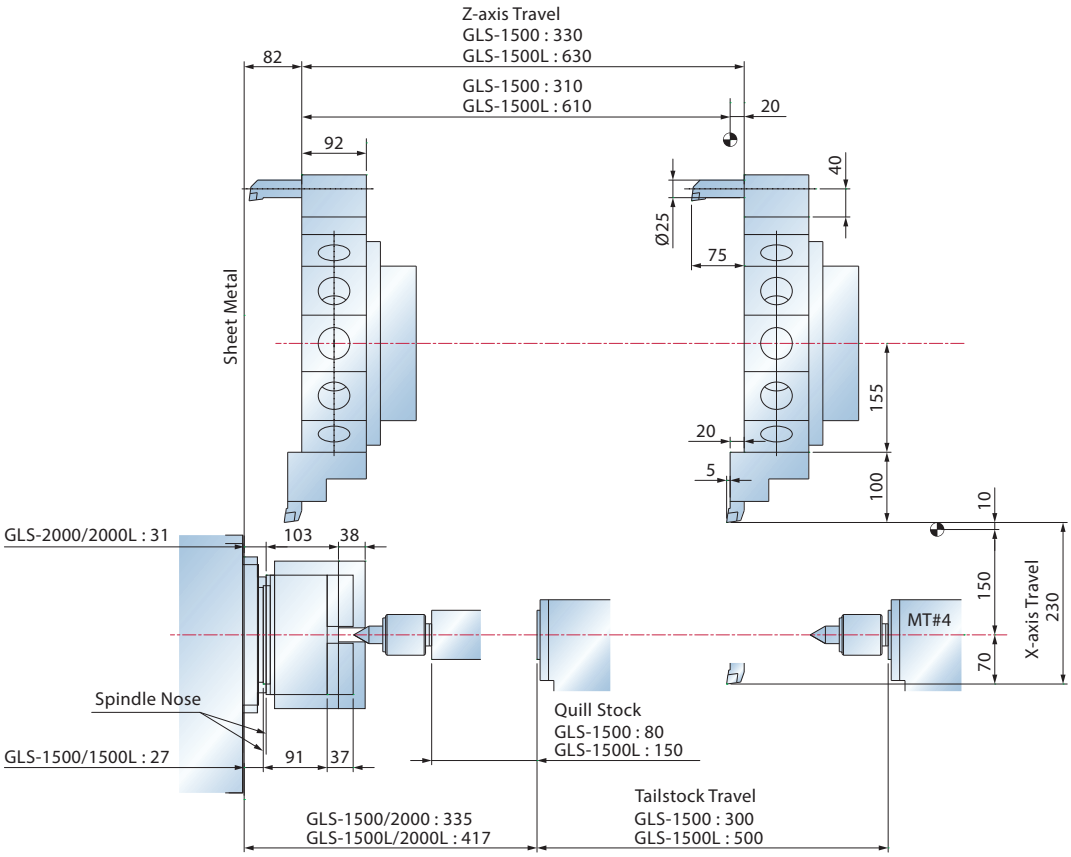

【 Live Tooling Turret + Sub-spindle 】 *1

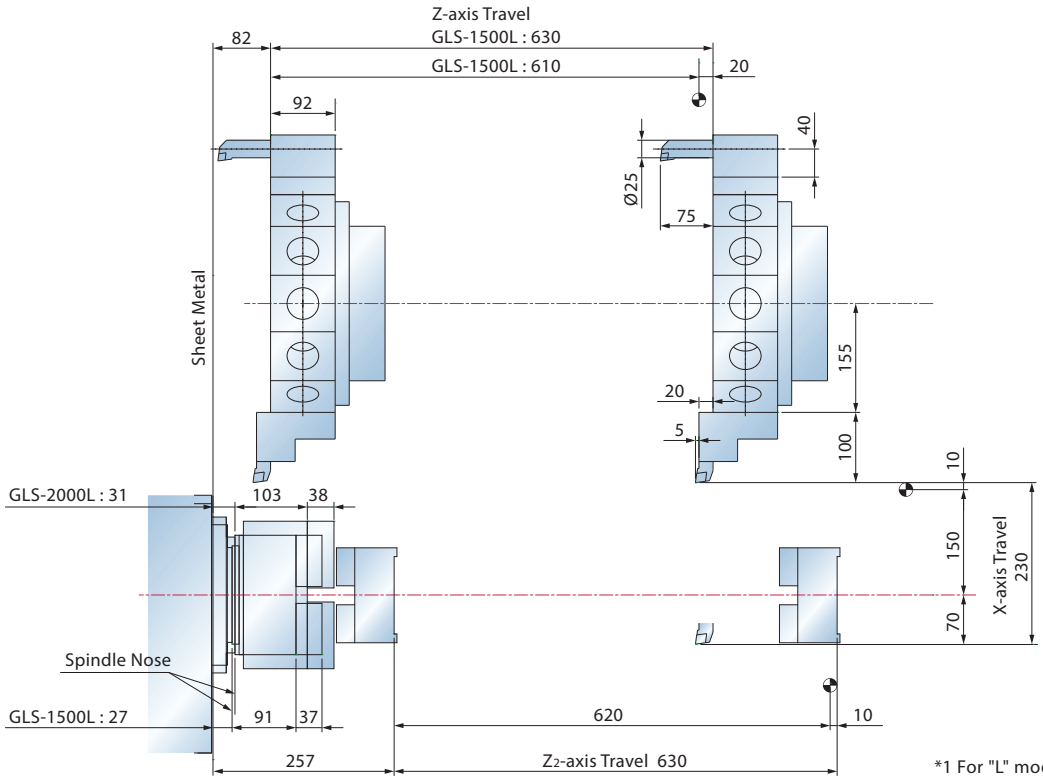

*1 For "L" model only

Unit : mm

Work Range

【 Live Tooling Turret + Y-axis 】

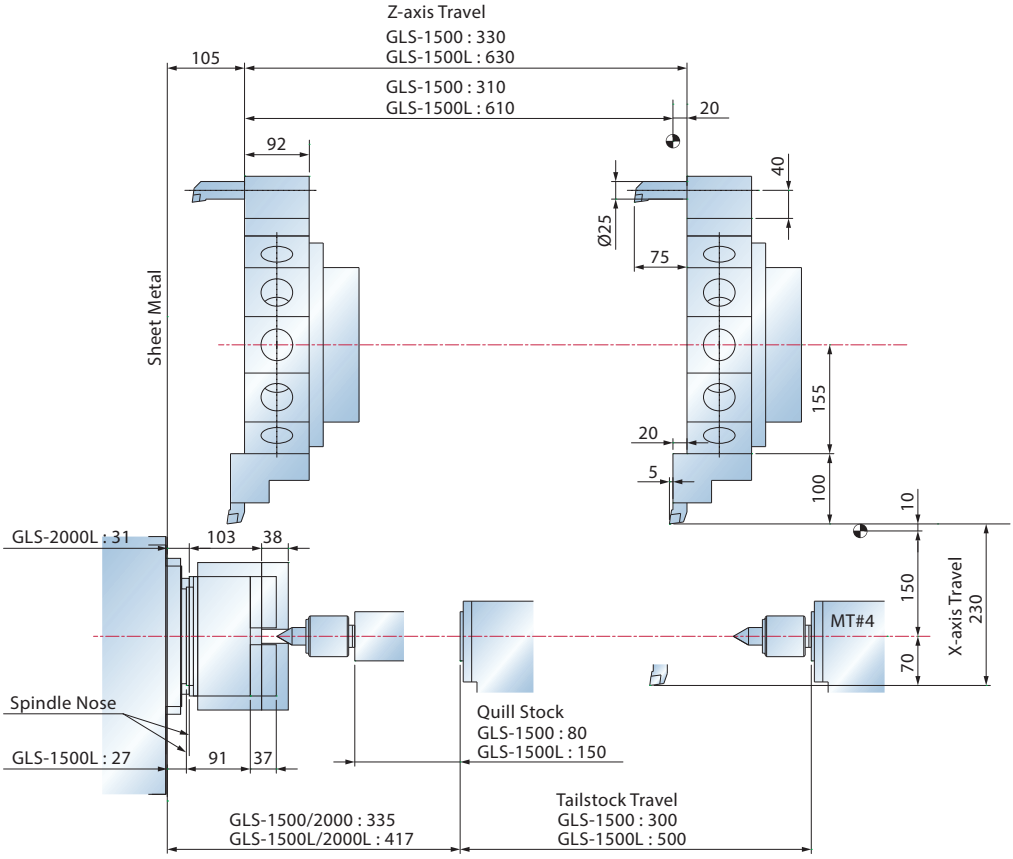

【 Live Tooling Turret + Y-axis + Sub-spindle 】 *1

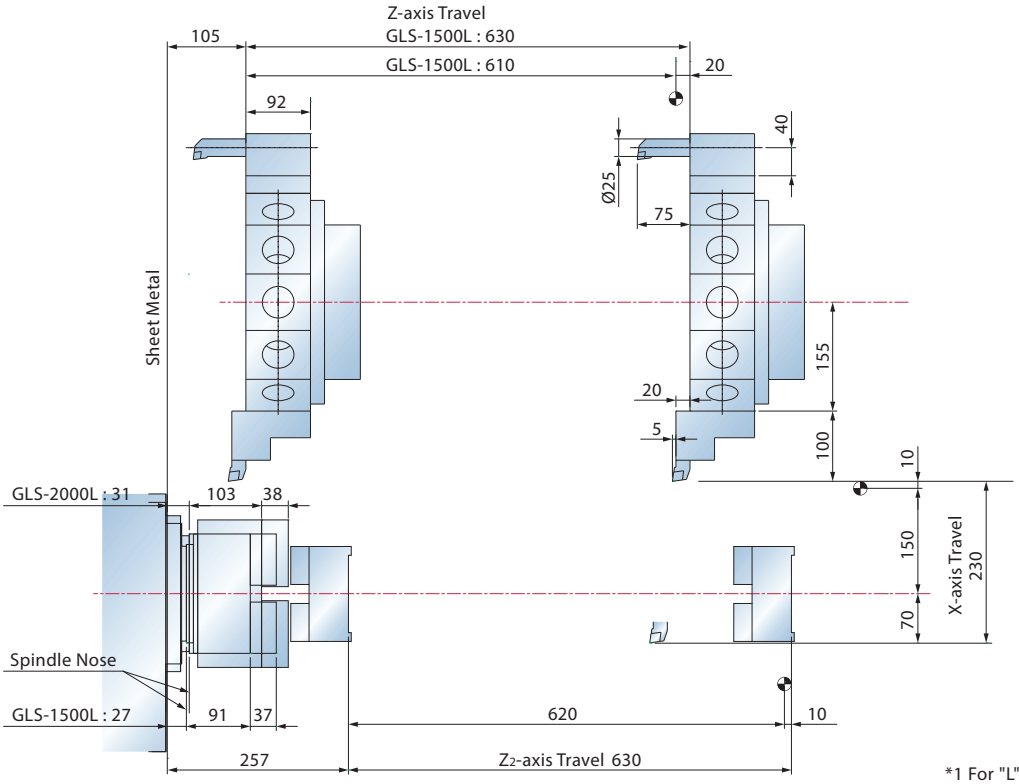

*1 For "L" model only

Unit : mm

FEATURES

Chip Conveyor

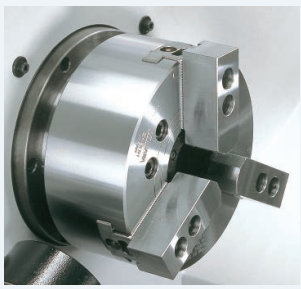

3-Jaw chuck w/
Soft Jaws x 1 set

Built-in lub. oil
collection system

Tri-color
status light

- The standard chip conveyor features adjustable timers that allow the operator to set operation intervals according to the amount of chips generated by the machine. Thus, reducing coolant loss to a minimum.

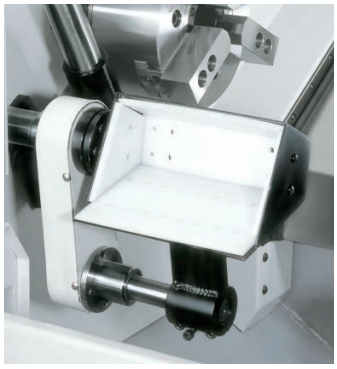

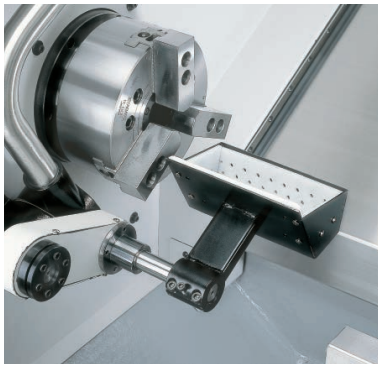

Parts Catchers (Optional)

- Optional hydraulic parts catchers can be programmed to catch finished parts after cut-off. Parts conveyor systems are also available.

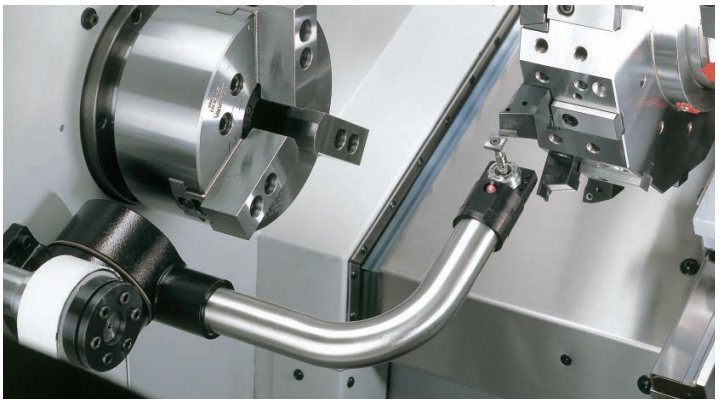

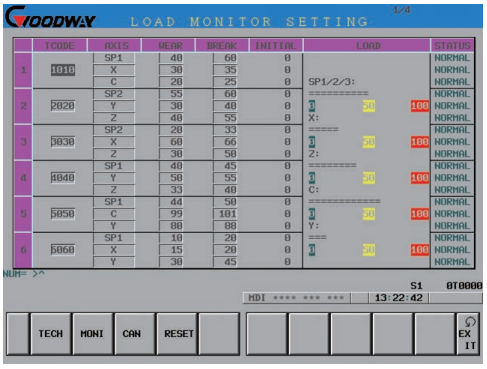

Load Monitoring (Optional)

- The optional load monitoring function is used to detect abnormal load of tools by monitoring the variation in spindle motor and servo motor loads during the cutting process. When abnormal loads are detected, the machine will stop at program end (M30) or immediately (feed hold status) according to tool life value or tool break value respectively.

Tool Setter (Optional)

- The optional RENISHAW HPMA tool presetter simplifies machining setup.

STANDARD & OPTIONAL FEATURES

S : Standard O : Option
– : Not Available C : Contact GOODWAY

		GLS-1500	GLS-2000
CAPACITY			
Main spindle motor configuration	Belt	S	S
	Built-in	O	–
Rigid tapping & spindle orientation		S	S
Main spindle disk brake		O	O
Cs-axis & disk brake for main spindle*1		O	O
Sub-spindle & 5" hydraulic cylinder		O	O
WORK HOLDING			
Hydraulic hollow cylinder for chuck	8"	S	–
	10"	–	S
Hollow 3-jaws chuck & 1 set soft jaws	6"	S	–
	8"	–	S
Hard jaws		O	O
Collet chuck		O	O
Special work holding chuck		C	C
In spindle work stopper		O	O
Spindle liner (guide bushing)		O	O
Foot switch for chuck operation		S	S
Quill hydraulic tailstock		O	O
MT#4 live center		O	O
Foot switch for tailstock operation		O	O
Two-stage programmable pressure	Chuck clamping	O	O
	Tailstock thrust	O	O
TURRET			
10-station turret		O	S
12-station turret		S	O
24-station turret		O	O
Gang type turret		O	O
12-station live tooling turret		O	O
Tool holder & sleeve package		S	S
Live tooling tool holders (0˚x2, 90˚x2)*1		O	O
MEASUREMENT			
RENISHAW HPMA tool presetter		O	O
COOLANT			
Coolant pump	3 Kg/cm²	S	S
	5 Kg/cm²	O	O
	10 Kg/cm²	O	O
High-pressure coolant system	20 Kg/cm²	C	C
Roll-out coolant tank		S	S
Oil skimmer		O	O
Coolant flow switch		O	O
Coolant level switch		O	O
Coolant intercooler system		O	O
CHIP DISPOSAL			
Chip conveyor with auto timer	Right discharge	S	S
	Rear discharge	C	C
Chip cart with coolant drain		O	O
Chuck air blow		O	O
Tailstock air blow		O	O
Coolant gun		O	O
Oil mist collector		O	O
AUTOMATIC OPERATION SUPPORT			
Parts catcher		O	O
Work-piece transport conveyor		O	O
Bar feeder		O	O
Bar feeder interface		O	O
Gantry-type loader / unloader		O	O
Auto door		O	O
External M-code output	4 sets (8)	O	O
	8 sets (16)	O	O
SAFETY			
Fully enclosed guarding		S	S
Door interlock (incl. Mechanical lock)		S	S
Impact resistant viewing window		S	S
Tailstock stroke out - end check		S	S
Chuck cylinder stroke out - end check		S	S
Chuck cylinder check valve		S	S
Low hydraulic pressure detection switch		S	S
Over travel (soft limit)		S	S
Load monitoring function*2		O	O

*1 For live tooling turret or Y-axis models.
*2 For O*i* - TF controller.

		GLS-1500	GLS-2000
OTHERS			
Tri-color machine status light tower		S	S
Work light		S	S
External work light		O	O
Electrical cabinet	Heat exchanger	S	S
	A/C cooling system	O	O
Complete hydraulic system		S	S
Advanced auto lubrication system		S	S
Foundation leveling & maintenance tool kit		S	S
Emergency maintenance electrical part package		S	S
Operation & maintenance manuals		S	S

		O*i*-TF	31*i*
FANUC CONTROL FUNCTIONS			
Display	10.4" color LCD	S	S
Graphic function	Standard	S	S
	Dynamic	O	O
Part program storage size	512K bytes	S	–
	1M bytes	–	S
	2M bytes	O	O
	4M bytes	–	O
	8M bytes	–	O
Registerable programs	400	S	–
	1,000	O	S
	4,000	–	O
Tool offset pairs	99	–	S
	128	S	–
	200	O	O
	400	–	O
	499	–	O
	999	–	O
	2000	–	O
Servo HRV control	HRV 3	S	S
Automatic data backup		S	S
Synchronous / Composite control		O	O
Inch / metric conversion		S	S
Polar coordinate interpolation		S	S
Cylindrical interpolation		S	S
Multiple repetitive cycle		S	S
Rigid tapping		S	S
Unexpected disturbance torque detection function		S	S
Spindle orientation		S	S
Constant surface speed control		S	S
Spindle speed fluctuation detection		S	S
Embedded macro		O	O
Spindle synchronous control		S	S
Background editing		S	S
Tool radius / Tool nose radius compensation		S	S
Multi-language display		S	S
Cs contouring control		S	S
Polygon turning		S	S
Helical interpolation		O	O
Direct drawing dimension programming		S	S
Thread cutting retract		S	S
Variable lead threading		S	S
Multiple repetitive cycle Ⅱ		S	S
Canned cycles for drilling		S	S
Tool nose radius compensation		S	S
Chamfering / Corner R		S	S
AI contour control Ⅰ		O	S
Multi part program editing		S	S
Manual handle retrace		O	O
Manual intervention and return		S	O
External data input		S	S
Addition of custom macro		S	S
Increment system C		S	S
Run hour & parts counter		S	S
Auto power-off function		S	S
RS-232 port		S	S
Memory card input / output (CF + USB)		S	S
Ethernet		S	S

MACHINE SPECIFICATIONS

■ : Metric ■ : Inch

CAPACITY	GLS-1500 / L	GLS-2000 / L
Max. swing diameter	Ø 560 mm 22"	
Swing over saddle	Ø 230 mm 9"	
Max. turning diameter	Ø 390 mm 15.35"	
Std. turning diameter	Ø 168 mm 6.61"	
Max. turning length	330 / 630 mm 13" / 24.8"	
Chuck size	6"	8"
Bar capacity	Ø 51 mm 2"	Ø 65 mm 2.5"
SPINDLE		
Hole through spindle	Ø 61 mm 2.4"	Ø 76 mm 3"
Spindle bearing diameter	Ø 90 mm 3.54"	Ø 110 mm 4.33"
Hydraulic cylinder	8"	10"
Spindle nose	A2-5	A2-6
Motor output (cont. / 30 min.)	11 / 15 kW 15 / 20 HP	
Motor full output speed	750 rpm	
Spindle drive system	Direct Belt Drive	
Spindle drive ratio	1 : 1 (Opt. 211 : 151)	1 : 1 (Opt. 211 : 171)
Spindle speed range	6,000 rpm	4,500 rpm
Spindle full output speed	750 rpm	750 rpm
BUILT-IN SPINDLE MOTOR (OPTIONAL)		
Bar capacity	Ø 45 mm 1.77"	—
Spindle motor type	α B112M / 15,000i	
Motor output (cont.)	5.5 kW 7 HP	—
Motor output (30 min.)	7.5 kW 10 HP	—
Cs-AXIS SPINDLE (OPTIONAL)		
Cs-axis drive motor	Bz-sensor	
Min. spindle indexing angle	0.001°	
Dynamic accuracy	± 0.02°	
X & Z AXES		
Max. X-axis travel	230 mm 9"	
Max. Z-axis travel	330 / 630 mm 13" / 24.8"	
X / Z axes rapids	30 m/min 1,181 IPM	
Slide way type	Linear Guide Way	
Feed rates	1~ 4,800 mm/min 1 ~ 189 IPM	
X-axis servo motor	AC 2.7 kW 3.6 HP	
Z-axis servo motor	AC 2.7 kW 3.6 HP	
X-axis ball screw Ø / pitch	Ø 32 mm / Pitch 10 1.42"	
Z-axis ball screw Ø / pitch	Ø 32 mm / Pitch 10 1.42"	
X / Z axes thrust (cont.)	769 Kg 1,695 lb	

Specifications are subject to change without notice.

MACHINE SPECIFICATIONS

■ : Metric ■ : Inch

TURRET	GLS-1500 / L	GLS-2000 / L
Stations	12 / 10	
Indexing drive	FANUC AC Servo motor	
Indexing speed	0.2 sec. Adjacent / 0.5 sec. 180 degrees (Single step)	
Accuracy	Positioning : ± 0.00069°, Repeatability: ± 0.00027°	
O.D. tool shank size	□ 25 mm 1"	
I.D. tool shank size	Ø 40 mm 1-1/2"	
LIVE TOOLING TURRET (OPTIONAL)		
Max. turning length	210 / 540 mm 8.27" / 21.25"	
Stations	12 (24 Position index)	
Live tooling stations	12 (Live tooling tools rotate in working position only.)	
Live tooling drive motor	2.7 kW 3.6 HP	
Live tooling torque	8 Nm (cont.) 6 lb-ft	
Index speed	0.2 sec. Adjacent / 0.5 sec. 180 degrees (Single step)	
O.D. tool shank size	□ 20 mm 3/4"	
I.D. tool shank size	Ø 25 mm 1"	
Live tooling shank size	Ø 16 mm ER 25 collets 0.62"	
Live tooling RPM range	4,000 RPM	
Y-AXIS (OPTIONAL)*1		
Max. turning diameter	Ø 310 mm 12.2"	
Max. turning length	540 mm 21.25"	
Max. Y-axis travel	70 mm = ± 35 mm 2.75" = ± 1.38"	
Y-axes rapids	10 m/min 393 IPM	
Slide way type	Linear Guide Way	
Feed rates	1 ~ 4,800 mm/min 1 ~ 189 IPM	
Y-axis servo motor	AC 2.7 kW 3.6 HP	
Y-axis ball screw Ø / pitch	Ø 32 mm / Picth 10 1.42"	
Y-axes thrust (cont.)	769 Kg 1,695 lb	
TAILSTOCK (OPTIONAL)		
Quill center taper	MT#4 (Live center required.)	
Quill diameter	Ø 70 mm 2.75"	
Quill travel	80 / 150 mm 3.15" / 5.9"	
Tailstock base travel	300 / 500 mm 11.8" / 19.69"	
Programmable quill / base	Yes / Yes	
Programmable base type	Positioned by Z-axis carriage	

Specifications are subject to change without notice.

■ : Metric ■ : Inch

SUB-SPINDLE (OPTIONAL)*1	GLS-1500 / L	GLS-2000 / L
Hole through spindle	Ø 42 mm 1.65"	
Bar capacity	Ø 31 mm 1.22"	
Spindle bearing diameter	Ø 75 mm 3"	
Spindle nose	Ø 110 mm 4.33"	
Motor (cont. / 5 min.)	3.7 / 5.5 kW 5 HP / 7.5 HP	
Spindle drive system	Built-in motor	
Spindle drive ratio	1:1	
Spindle speed range	6,000 RPM	
Spindle full output speed	1,750 RPM (5 min.) / 2,300 RPM (cont.)	
Spindle torque (cont. / 5 min.)	15 / 30 Nm 11 / 22 lb-ft	
Z2-axis travel	630 mm 24.8"	
Z2-axis rapid	30 m/min 1,181 IPM	
Slide way type	Linear guide way	
Z2-axis ball screw Ø / pitch	Ø 32 mm / Pitch 10 1.42"	
Z2-axis thrust (cont.)	448 Kgf 987 lbf	
GENERAL		
Repeatability on X-axis	± 0.002 mm ± 0.000078"	
Repeatability on Z-axis	± 0.002 mm ± 0.000078"	
CNC controller	FANUC O*i*-TF or 31*i*	
Voltage / Power requirement	AC 200 / 220 +10% to -15% 3 phase / 20 kVA	
Hydraulic tank capacity	20 L 5.2 gal	
Coolant tank capacity	100 / 160 L 26 / 42 gal (Y-axis model : 170 L 44.9 gal)	
Coolant pump	0.5 kW (3/4 HP, 60 Hz) rated at 3 bar (43.5 PSI)	
Machine weight	3,000 / 3,400 Kg 6,600 lb / 7,500 lb	
	Y-axis model : 3,700 Kg 8,200 lb	
Dimensions L × W × H	2,174 x 1,550 x 1,680 mm 86" x 62" x 67"	2,612 x 1,780 x 1,752 mm 103" x 71" x 69"
	Y-axis model : 2,667 x 1,832 x 2,065 mm 105" x 73" x 82"	

Specifications are subject to change without notice.
*1 For " L " models only.

Machine Layout

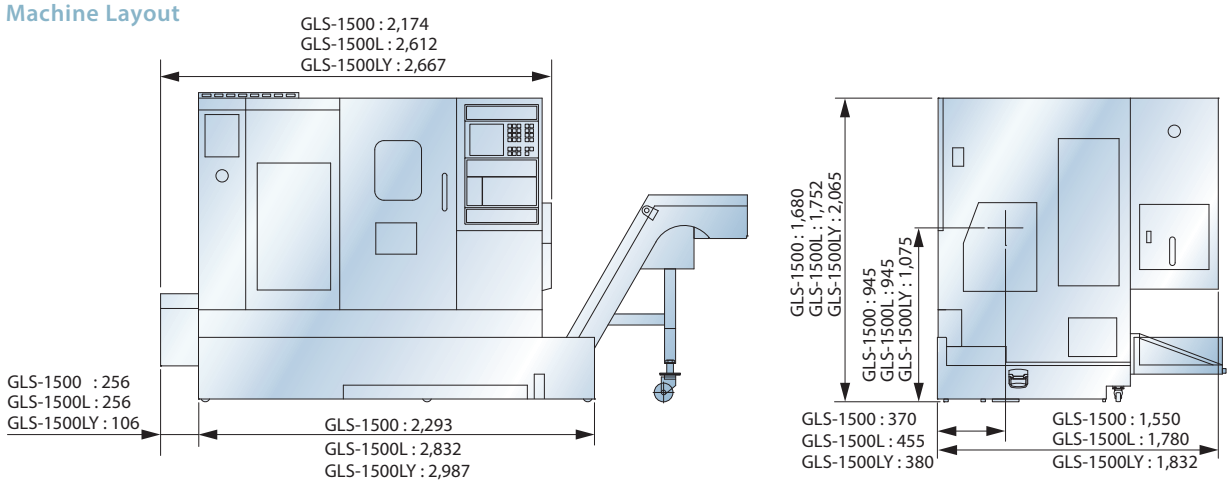

Unit : mm

THE ULTIMATE MACHINING POWER

GOODWAY®

GOODWAYCNC.com

GOODWAY MACHINE CORP.

Official distributor for Benelux

THOLITEC

Jan Doustraat 37
1689 XK Zwaag (NH)
The Netherlands

Tel. +31(0)85 0022937
info@tholitec.nl
www.tholitec.nl

Copyright 2019 by Goodway Machine Corp. All rights reserved
G-GLS-1500-EN-201912